City of Rochester, Minnesota

Department Of Public Works

REPAIR TO RIVERVIEW HEIGHTS DRIVE NE
(STREET REPAIR PROJECT)

TOWNSHIP 107N RANGE 14W SECTION 25 & 26

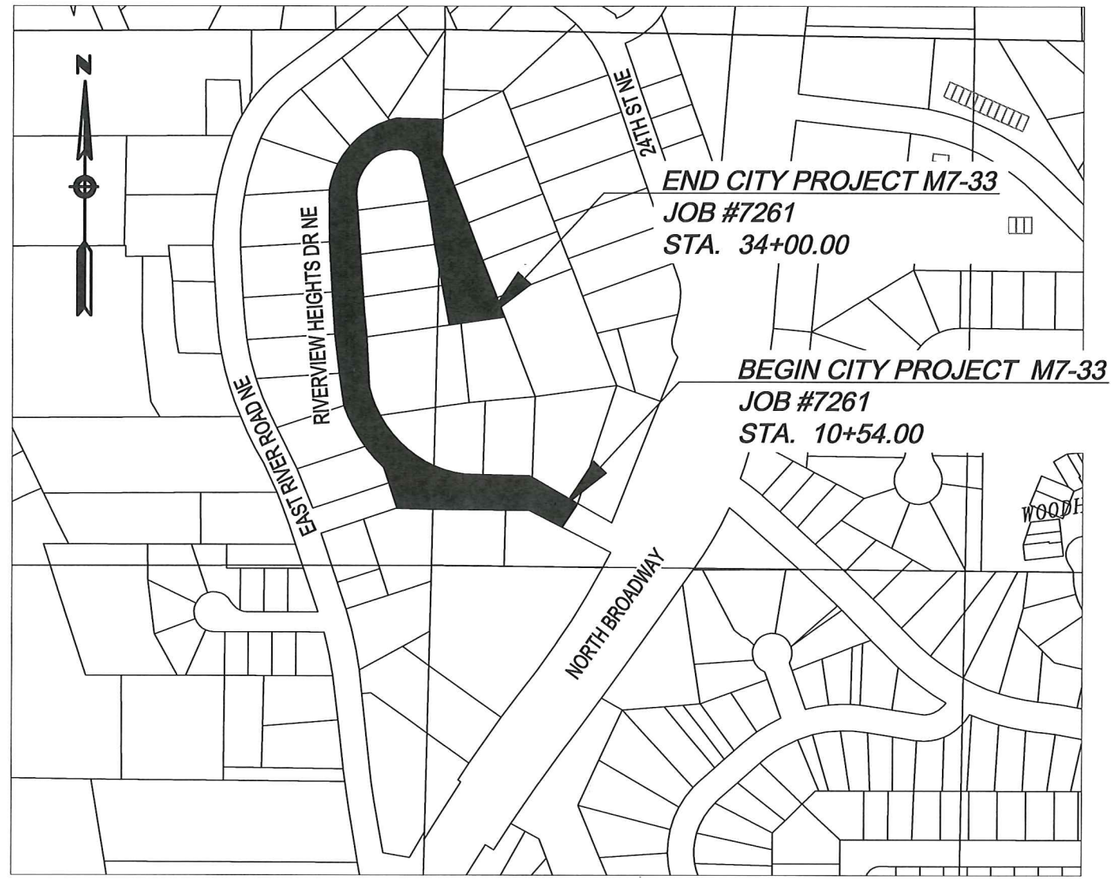

City of Rochester and surrounding area

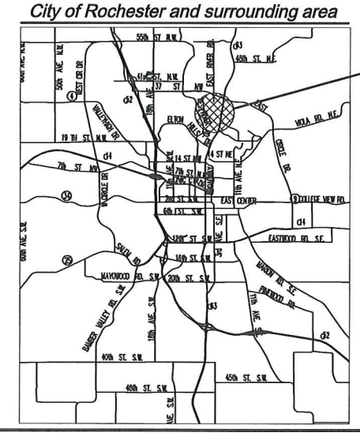

APPROXIMATE PROJECT LOCATION

LEGAL DESCRIPTION: CHRISTENSON - SEHL SUBDIVISION

PROJECT LOCATION
OLMSTED COUNTY
ROCHESTER DISTRICT

CONVENTIONAL SIGNS AND ABBREVIATIONS

CORPORATE LIMITS	
SECTION LINE	
RIGHT OF WAY LINE (STATE)	
PROPERTY LINE (STREET)	
ADDITION LINE	
SURVEY LINE	1 2
CENTER LINE	
WIRE FENCE	
STONE WALL OR FENCE	
HEDGE	
GUARD RAIL	
CREEK OR RIVER	
DRY RUN	
RAILROAD	
RAILROAD RIGHT OF WAY LINE	
CURB & GUTTER INP.	
SIDEWALK INP.	
SANITARY SEWER INP.	
STORM SEWER INP.	
WATERMAIN, GATEVALVE & BOX INP.	
ELECTRIC UNDERGROUND INP.	E
TELEPHONE UNDERGROUND INP.	T
STEAM MAIN INP.	S
GAS MAIN INP.	
CURB INP.	
HYDRANT INP.	
TELEPHONE, POWER POLES	
LIGHT POLES	
TRAFFIC SIGNAL	
FIRE ALARM BOX	
RAILROAD CROSSING SIGN	RXR
RAILROAD CROSSING BELL	
TREE	
STUMP	
BUILDING	
IRON PIPE	
STONE MONUMENT	
MANHOLE INP.	
BRICK INP.	
BRIDGE INP.	
CULVERT INP.	
CATCH BASIN INP.	
CURB & GUTTER CONST.	
SIDEWALK CONST.	
SANITARY, STORM SEWER CONST.	
WATERMAIN CONST.	
MANHOLE CONST.	
CATCH BASIN CONST.	
HYDRANT CONST.	
CROSS	
TEE	
TAPPING MACHINE SLEEVE & VALVE	
BEND, ELBOW	
INCREASER, DECREASER	
CONCRETE	
SAND	
CRUSHED ROCK	R
BITUMINOUS	
CLEAR & GRUB TREE	
SW, C&G, CONC BASE, DRWY-REMOVE(GRD & ALIGN)	
SW, C&G, CONC BASE, DRWY-REMOVE(CONDEMED SW)	
SOIL BORING LOCATION	NO.2

ACRE	A.
ADJUST	ADJ.
AGGREGATE	AGG.
APPROACH	APP.
BENCH MARK	B.M.
BITUMINOUS	BIT.
BRIDGE	BR.
BUILDING	BLDG.
CAST IRON PIPE	C.I.P.
CATCH BASIN	C.B.
CENTER LINE	℄
CENTER TO CENTER	C TO C
CLAY SEWER PIPE	C.S.P.
CONCRETE	CONC.
CONSTRUCT	CONST.
CORNER	COR.
CORRUGATED METAL PIPE	C.M.P.
CORRUGATED METAL PIPE ARCH	C.M.P.-A
CRUSHED ROCK	CR. RK.
CURB & GUTTER	C & G
DEFLECTION LEFT	D L
DEFLECTION RIGHT	D R
DEGREE OF CURVE	D
DELTA OR INTERSECTION ANGLE	Δ
DRIVE	DR.
DRIVEWAY	DRWY.
DROP INLET	D.I.
DUCTILE IRON PIPE	D.I.P.
EAST	E.
ELEVATION	EL.
EMBANKMENT	EMB.
ENTRANCE	ENT.
EQUATION	EQ.
ESTIMATE	EST.
EXCAVATION	EXC.
EXPANSION	EXP.
FLOW LINE	F.L.
FOOT	FT.
FOUNDATION	FD'N.
FRAME	FR.
FURNISH AND INSTALL	F. & I.
GALLON	GAL.
GATEVALVE	GV
GRATE	GR.
HIGH WATER	H.W.
HIGHWAY	HWY.
HORIZONTAL	HORIZ.
HYDRANT	HYD.
INLET	INL.
INPLACE	INPL.
INSTALL	INST.
INVERT	INV.
IRON PIPE	I. P.
JUNCTION	JCT.
LEFT	LT.
LENGTH OF CURVE	L.
LINEAL	LIN.
LOW WATER	L.W.
MANHOLE	M.H.
MINIMUM	MIN.
MISCELLANEOUS	MISC.
MONUMENT	MON.
NORTH	N.
NORTH EAST	N.E.
NORTH WEST	N.W.
NUMBER	NO.
OUTLET	OUTL.
PERFORATED	PERF.
POINT OF CURVATURE	P.C.
POINT OF INTERSECTION	P.I.
POINT OF TANGENCY	P.T.
POINT ON TANGENT	P.O.T.
RADIUS, ROCK, RANGE	R.
RAILROAD	R.R.
REINFORCED	REINF.
REINFORCED CONCRETE PIPE	R.C.P.
RETURN	RET.
RIGHT	RT.
SANITARY	SAN.
SEWER	SEW.
SIDEWALK, SOUTH WEST	S.W.
SOUTH	S.
SOUTH EAST	S.E.
SPECIFICATION, SPECIAL	SPEC.
STANDARD	STD.
STATION	STA.
STORM, STATE, STUCCO	ST.
STREET, STONE, STEEL	ST.
SUBDRAIN	SD,SUBD
SURFACE	SURF.
TANGENT	TAN.
TURNING POINT, TELEPHONE POLE	T.P.
VARIABLE	VAR.
VEHICULAR MEASURE	V.M.
VERTICAL	VERT.
VERTICAL CURVE	V.C.
VETRIFIED	VIT.
WEST, WATER	W.

NOTE: SECTION NUMBERS READ FROM SOUTH

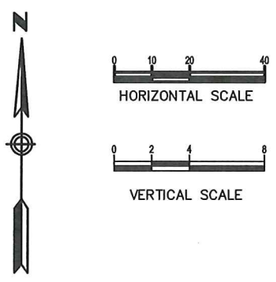

GOVERNING SPECIFICATIONS

State of Minnesota

The 2014 edition of the Minnesota Department of Transportation "Standard Specifications for Construction" shall govern except as modified by special provision.

City of Rochester, Minnesota

- General Requirements and Covenants for Public Works Construction, 2000 edition.
- S100 Standard Specifications for Sewer Construction.
- C150 Standard Specifications for Construction of Service Connections.
- W200 Standard Specifications for Watermain Construction.
- T100 Standard Specifications for Trench Excavation, Backfill & Surface Restoration
- C700 Standard Specifications for Sidewalk Construction.

UTILITY QUALITY LEVEL

The subsurface utility information in this plan is quality level D. This quality level was determined according to the guidelines of CI/ASCE 38-2, entitled "Standard Guidelines for the Collection and Depiction of Existing Subsurface Utility Data."

INDEX TO PLANS

Sheet Title	Sht. No.
TITLE SHEET	1
ESTIMATED QUANTITIES	2
TABULATIONS	3-4
REMOVALS	5-6
EROSION CONTROL & TURF ESTABLISHMENT	7-8
UNDERGROUND & GRADING	9-12
CROSS SECTIONS	13-18

This plan contains 18 Total sheets

City of Rochester, Minnesota
Department Of Public Works

201 4th Street S.E.
Room 108 - City Hall
Rochester, MN 55904
Phone: (507) 328-2400
Fax: (507) 328-2401

Ronal Wallace 6/6/16
Ronal Wallace , Design Technician Date

Russell Kelm
Russell Kelm, Design Engineer: I hereby certify that this plan was prepared by me or under my direct supervision, and that I am a duly Licensed Professional Engineer under the laws of the state of Minnesota.
Date: 6-6-16 License Number 24687

6/6/16
Approved: Douglas Nelson, Assist. City of Rochester Engineer Date

6/6/2016
Approved: Richard Freese, City of Rochester Engineer Date

Project No M7-33 J 7261

Sheet 1 of 18 Sheets

\\rochsvr17\pubworks\PROJECTS\J-PROJ\J7261\Design\Dwgs\7261TITLE.dwg, TITLE SHEET, 6/3/2016 10:07:11 AM, 1:2

STANDARD DETAIL PLATES

CITY OF ROCHESTER

NO.	DETAIL PLATE
1-01 I	STRUCTURE TYPE 1
1-04 I	STRUCTURE TYPE 4 (XXin.)
1-07 B	MANHOLE WATERPROOFING
1-10 C	CURB BOX COVER
1-11 I	CASTING REFERENCE NUMBERS
1-12 B	STANDARD CASTING ASSEMBLIES
1-13 C	STRUCTURE ADJUSTING RINGS
2-01 E	CONCRETE CURB & GUTTER
2-06 D	CURB & GUTTER REINFORCEMENT AT CATCH BASINS
7-01 B	SILT FENCE DETAILS
7-05 A	INLET PROTECTION

THE FOLLOWING STANDARD PLATES, APPROVED BY THE FEDERAL HIGHWAY ADMINISTRATION SHALL APPLY ON THIS PROJECT

STATE OF MINNESOTA

NO.	DETAIL PLATE
3000L	Reinforced Concrete Pipe (5 Sheets)
3006G	Gasket Joint for R.C. Pipe (2 Sheets)
8000I	Standard Barricades

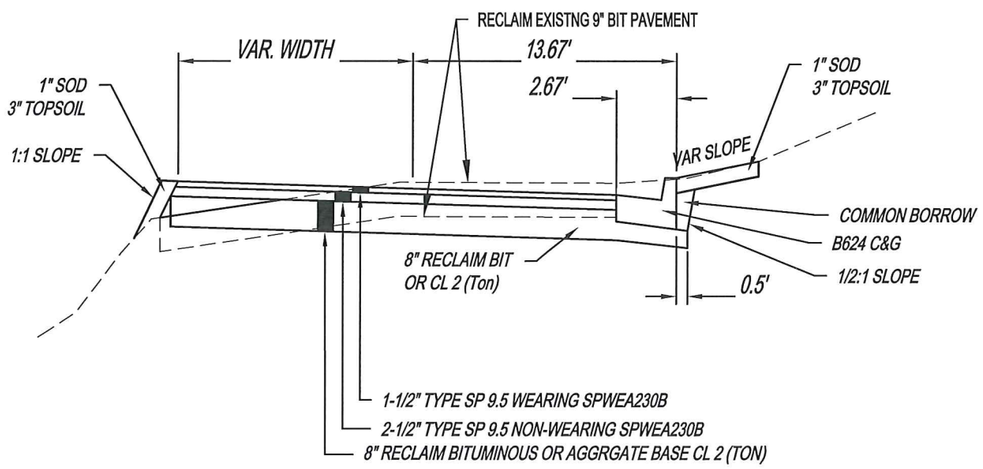

TYPICAL SECTION
RIVERVIEW HEIGHTS DR NE
STA. 14+10 TO 24+10

ESTIMATED QUANTITIES

Notes	Table	Sheet No.	Item No.	Description	Units	Quantity
				1 STREET (350)		
			2021.501/00010	MOBILIZATION	LS	1.00
			2101.502/00010	CLEARING	TREE	1.00
			2101.507/00010	GRUBBING	TREE	1.00
	B	4	2104.513/00010	SAWING BITUMINOUS PAVEMENT	L F	39.00
	A	2	2105.501/00010	COMMON EXCAVATION (P)	C Y	750
			2105.501/00010	COMMON BORROW (CV)	CY	16
2			2211.501/00020	AGGREGATE BASE CLASS 2	TON	500
	D	4	2211.503/00050	AGGREGATE BASE (CV) CLASS 5	C Y	520
	B	4	2331.604/00060	BITUMINOUS RECLAMATION (P)	SY	2353
2			2331.607/00010	HAUL BIT PAVEMENT RECLAMATION (LV)	CY	100
1	D	4	2360.501/12200	TYPE SP 9.5 WEARING COURSE MIX (2,B)	TON	497.00
1	D	4	2360.502/22200	TYPE SP 12.5 NON WEAR COURSE MIX (2,B)	TON	332.00
	C	3	2504.602/00032	ADJUST GATE VALVE & BOX	EACH	4.00
4	D	4	2531.501/02320	CONCRETE CURB & GUTTER DESIGN B624	L F	972.00
			2563.601/00010	TRAFFIC CONTROL	LS	1.00
2			2573.502/00040	SILT FENCE; TYPE MS	L F	500.00
	G	4	2573.530/00010	STORM DRAIN INLET PROTECTION	EACH	3.00
	F	4	2574.525/00010	COMMON TOPSOIL BORROW	C Y	100.00
	F	4	2575.505/00060	SODDING TYPE MINERAL	S Y	840.00
				2 STORM SEWER (450)		
2			2105.503/00010	ROCK EXCAVATION	CY	50.00
	H	3	2503.541/90125	12" RC PIPE SEWER DESIGN 3006 CL V	L F	36.00
	H	3	2503.541/90155	15" RC PIPE SEWER DESIGN 3006 CL V	L F	288.00
3	I	3	2506.501/00301	CONST DRAINAGE STRUCTURE DESIGN SPEC 1	EACH	3.00
3	I	3	2506.501/00304	CONST DRAINAGE STRUCTURE DESIGN SPEC 4	EACH	3.00
				3 SANITARY SEWER (250)		
			2104.509/00105	REMOVE CASTING	EACH	3.00
		3	2506.516/00010	CASTING ASSEMBLY	EACH	3.00
			2506.522/00011	ADJUST FRAME & RING CASTING	EACH	1.00
		3	2506.602/09011	FURNISH & INSTALL MANHOLE WATERPROOFING-INTERIOR	EACH	4.00

NOTES:
(1) BITUMINOUS MATERIAL FOR TACKCOAT INCIDENTAL
(2) INCLUDES AS A TOKEN AMOUNT NOT SUBJECT TO THE PROVISIONS OF 1402
(3) SEE CITY OF ROCHESTER STANDARD DETAIL PLATE 1-01 AND 1-04
(4) INCLUDES TRANSITION CURB

EARTHWORK BALANCE (A)	
COMMON EXCAVATION (BM) (1)	750
BITUMINOUS RECLAIM	588
TOPSOIL REQUIRED (CV) (2)	100
MATERIAL AVAILABLE (BM)	62
MATERIAL AVAILABLE (CV) (3)	56
EMBANKMENT (CV)	72
COMMON BORROW (CV)	16

NOTES:
(1) INCLUDES TOPSOIL STRIPPING VEGETATION IN FILL AREAS
(2) 1.0 SHRINKAGE FACTOR FROM TOPSOIL REQUIRED COMPACTED VOLUME (CV) TO BANK MEASURE (BM)
(3) 1.1 SHRINKAGE FACTOR FROM BANK MEASURE (BM) TO COMPACTED VOLUME (CV) AND LOOSE VOLUME (LV) TO COMPACTED VOLUME (CV)

Revision comment: –
Revised: –

I hereby certify that this plan was prepared by me or under my direct supervision and that I am a duly Licensed Professional Engineer under the laws of the State of Minnesota.
Date: 06/22/16 Lic. No. 24667

City of Rochester, Minnesota
Department Of Public Works
201 4th Street S.E.
Rochester, MN 55904
Phone: (507) 328-2400
FAX: (507) 328-2401

Title: ESTIMATED QUANTITIES
Designer: RLW
Checker: RJK

Project No. M7-33 J7261
Sheet 2 of 18 Sheets

\\rochsvr17\pubworks\PROJECTS\J-PROJ\J7261\Design\Dwgs\7261ESTQUANT.dwg, ESTIMATED QUANTITIES, 6/23/2016 10:17:54 AM, 1:2

EXISTING UTILITY LOCATIONS (A)

STATION LOCATION	OFFSET LT	OFFSET RT	INPLACE UTILITY	LEAVE AS IS	NOTES
10+03		X	TELEPHONE-QWEST	X	BETWEEN ROADWAY EDGE AND R.O.W.
10+87		X	GAS-MINNESOTA ENERGY	X	BETWEEN ROADWAY EDGE AND R.O.W.
10+88.75		X	POWER POLE	X	
12+12.78		X	POWER POLE	X	
13+39.57		X	POWER POLE	X	
13+54		X	GAS-MINNESOTA ENERGY	X	SERVES #331 RIVERSIDE HEIGHTS DR NE
13+56		X	GAS-MINNESOTA ENERGY	X	SERVES #331 RIVERSIDE HEIGHTS DR NE
14+33.85		X	POWER POLE	X	
14+34		X	TELEPHONE-CENTURYLINK	X	BETWEEN ROADWAY EDGE AND R.O.W.
18+14.78	X		LIGHT POLE	X	
23+00.49		X	LIGHT POLE		RELOCATE TO 2' BEHIND CURB
24+86.45	X		LIGHT POLE	X	
25+30		X	GAS-MINNESOTA ENERGY	X	
26+09		X	GAS-MINNESOTA ENERGY	X	AT EDGE OF ROADWAY
26+30			GAS-MINNESOTA ENERGY	X	CROSSING ROADWAY
28+29.13	X		POWER POLE	X	
30+01.06	X		POWER POLE	X	
30+58			GAS-MINNESOTA ENERGY	X	CROSSING ROADWAY
33+21.23	X		POWER POLE	X	
33+87		X	GAS-MINNESOTA ENERGY	X	IN ROADWAY MEDIAN

NOTES:
THE "LEAVE AS IS" AND "RELOCATE" COLUMNS ARE BASED UPON THE BEST INFORMATION AVAILABLE AND MAY NOT REFLECT THE ACTUAL EFFECTS ON THE UTILITIES CONSTRUCTION. ACTUAL DETERMINATION WILL BE MADE IN THE FIELD DURING CONSTRUCTION.

UTILITIES ARE SHOWN AT APPROXIMATE LOCATIONS. THE CONTRATOR SHALL DETERMINE THE ACTUAL LOCATION OF ALL UTILITIES IN THE FIELD.

ALL UTILITY WORK SHOWN ON THIS SHEET WILL BE DONE BY OTHERS UNLESS NOTED.

EXIST SANITARY STRUCTURE TABLE

STRUCT NO.	STATION	OFFSET	ALIGNMENT	CASTING EL	NORTHING-EASTING	*ADJUST CASTING EL. (MH WATERPROOF REQUIRED)*
EX-MH1	10+57.08	2.88' LT	RIVERVIEW HEIGHTS DR	1051.82' *(REPLACE CASTING)*	N=178131.8816 E=620772.8732	***1051.94***
EX-MH2	12+17.99	4.19' RT	RIVERVIEW HEIGHTS DR	1046.69' *(REPLACE CASTING)*	N=178201.7605 E=620628.0412	***1046.81***
EX-MH3	13+60.05	54.83' LT	RIVERVIEW HEIGHTS DR	1022.02' *(REPLACE CASTING)*	N=178154.8394 E=620480.8689	
EX-MH4	13+63.46	5.57' LT	RIVERVIEW HEIGHTS DR	1042.38'	N=178204.2351 E=620481.8653	***1042.50***
EX-MH5	25+72.18	21.01' LT	RIVERVIEW HEIGHTS DR	1133.90'	N=179021.4838 E=620392.4569	***1134.02***

NOTE: REPLACE CASTING INCLUDES ADJUSTMENT OF CASTING

RIVERVIEW HEIGHTS DR ALIGNMENT DATA

NUMBER	STATION	LENGTH	RADIUS	RADIUS CENTER	LINE/CHORD DIRECTION	START POINT	END POINT
C1	11+03.72	193.73	400.00	N=177807.4784 E=620539.1163	N74° 47' 49.87"W	N=178157.0631 E=620733.5143	N=178207.3710 E=620548.3864
C2	13+41.52	110.13	275.00	N=178483.3186 E=620510.6946	N77° 11' 57.38"W	N=178208.3925 E=620504.3214	N=178232.6304 E=620397.6441
C3	14+76.68	361.85	331.27	N=178544.9040 E=620511.0173	N34° 26' 03.72"W	N=178242.9172 E=620374.8331	N=178526.7453 E=620180.2418
C4	21+80.14	157.39	208.42	N=178879.2638 E=620369.6268	N18° 29' 28.79"E	N=178867.8391 E=620161.5167	N=179013.5836 E=620210.2576
C5	23+87.36	87.05	100.00	N=178987.2408 E=620318.8356	N65° 03' 44.81"E	N=179051.6864 E=620242.3714	N=179087.2408 E=620318.8356
C6	24+75.92	68.82	48.00	N=179039.2408 E=620320.3455	S48° 55' 26.78"E	N=179087.2408 E=620320.3455	N=179045.7952 E=620367.8959
C7	29+38.03	74.85	50.00	N=178667.6163 E=620476.4819	S54° 54' 22.00"E	N=178657.2028 E=620427.5783	N=178618.0779 E=620483.2601
C8	30+18.41	70.07	40.00	N=178658.4580 E=620483.3142	N32° 01' 26.69"E	N=178618.8272 E=620488.7368	N=178670.9252 E=620521.3217
C9	32+37.07	142.34	998.00	N=178501.0545 E=619526.7230	N22° 14' 47.00"W	N=178812.1122 E=620475.0094	N=178943.7425 E=620421.1677
L1	10+00.00	103.72			N60° 55' 20.39"W	N=178106.6565 E=620733.5143	N=178157.0631 E=620733.5143
L2	12+97.45	44.08			N88° 40' 19.36"W	N=178207.3710 E=620504.3214	N=178208.3925 E=620504.3214
L3	14+51.66	25.02			N65° 43' 35.40"W	N=178232.6304 E=620374.8331	N=178242.9172 E=620374.8331
L4	18+38.53	341.61			N03° 08' 32.05"W	N=178526.7453 E=620161.5167	N=178867.8391 E=620161.5167
L5	23+37.53	49.83			N40° 07' 29.62"E	N=179013.5836 E=620242.3714	N=179051.6864 E=620242.3714
L6	24+74.41	1.51			N90° 00' 00.00"E	N=179087.2408 E=620320.3455	N=179087.2408 E=620320.3455
L7	25+44.74	262.45			S07° 50' 53.57"E	N=179045.7952 E=620403.7333	N=178785.8031 E=620403.7333
L8	28+07.19	64.46			S08° 56' 33.83"E	N=178785.8031 E=620413.7529	N=178722.1297 E=620413.7529
L9	28+71.65	66.38			S12° 01' 15.41"E	N=178722.1297 E=620427.5783	N=178657.2028 E=620427.5783
L10	30+12.88	5.53			N82° 12' 31.42"E	N=178618.0779 E=620488.7368	N=178618.8272 E=620488.7368
L11	30+88.48	148.59			N18° 09' 38.05"W	N=178670.9252 E=620475.0094	N=178812.1122 E=620475.0094
L12	33+79.40	20.60			N26° 19' 55.96"W	N=178943.7425 E=620412.0317	N=178962.2017 E=620412.0317

STORM PIPE TABLE (H)

PIPE #	STRUCT FROM	STRUCT TO	LOCATION	SIZE-MAT	LENGTH C. TO C.	SLOPE
EX-P1		EX S-3	13+83.67 - 14+24.64	EXIST 15" CMP	38.99'	14.65%
EX-P3	S-2	EX S-1	14+23.00 - 14+19.25	EXIST 24 " RCP	42.22'	20.80%
EX-P4	EX S-3	S-2	14+24.64 - 14+23.00	EXIST 24" RCP	17.78'	20.83%
EX-P7 (PLUG-FILL & ABANDON)			19+39.20 - 19+36.62	EXIST 15" CMP	33.31'	1.89%
EX-P8 (PLUG-FILL & ABANDON)			21+84.14 - 21+86.65	EXIST 10" PVC	30.33'	6.73%
EX-P9			24+18.80 - 23+78.74	EXIST 12" CMP	263.57'	6.83%
P2	S-2	S-4	14+23.00 - 15+85.00	15" RCP	162.53'	6.20%
P5	S-4	S-5	15+85.00 - 15+84.97	12" RCP	14.67'	12.59%
P6	S-4	S-6	15+85.00 - 17+10.00	15 " RCP	124.86'	9.09%
P10	S-7	S-6	17+10.00 - 17+10.00	12 " RCP	10.67'	1.03%
P11	S-8	S-7	17+20.45 - 17+10.00	12 " RCP	10.11'	9.99%

INPLACE WATERMAIN FITTINGS (C)

STATION	OFFSET		ALIGNMENT	DESCRIPTION	ELEVATION	ADJUSTED ELEVATION	NORTHING	EASTING
10+43.99	0.03	RT	RIVERVIEW HEIGHTS DR	GATE VLV	1051.81'		178128.0584'	620785.7297'
10+48.89	-23.28	LT	RIVERVIEW HEIGHTS DR	HYD	1054.08'		178110.0716'	620770.1224'
10+48.97	-20.82	LT	RIVERVIEW HEIGHTS DR	GATE VLV	1051.61'		178112.2620'	620771.2496'
11+30.81	15.20	RT	RIVERVIEW HEIGHTS DR	CURB BOX	1050.08'		178183.1680'	620715.8763'
12+15.79	7.24	RT	RIVERVIEW HEIGHTS DR	GATE VLV		***1046.74'***	178204.2443'	620630.8979'
12+16.17	18.55	RT	RIVERVIEW HEIGHTS DR	HYD	1049.03'		178215.3466'	620633.0512'
25+09.64	-24.65	LT	RIVERVIEW HEIGHTS DR	GATE VLV		***1130.01'***	179094.6890'	620367.2919'
25+92.29	-37.59	LT	RIVERVIEW HEIGHTS DR	HYD	1138.69'		179003.8215'	620411.6236'
26+13.33	-28.04	LT	RIVERVIEW HEIGHTS DR	GATE VLV		***1136.09'***	178981.6789'	620405.0387'
30+72.95	-5.20	LT	RIVERVIEW HEIGHTS DR	GATE VLV		***1140.44'***	178655.9795'	620518.0255'
31+07.85	-20.62	LT	RIVERVIEW HEIGHTS DR	HYD	1143.22'		178682.9049'	620495.6923'
31+08.20	-23.31	LT	RIVERVIEW HEIGHTS DR	GATE VLV	1139.70'		178682.3960'	620493.0272'
						TOTALS		

STORM STRUCTURE TABLE (I)

STRUCT NO.	CONNECTED PIPES	STATION	OFFSET	ALIGNMENT	TYPE	TOP OF CURB CASTING EL (-0.65' For CB Grate EL)	CAST ASSEMBLY	DEPTH	PIPE EL	NORTHING-EASTING
EX S-1	EX-P3	14+19.25	-47.02' LT	RIVERVIEW HEIGHTS DR	EXIST 24" RCP APRON	1027.35	Standard	2.75	OUTL EL = 1025.10 - N	N=178176.2400 E=620413.7473
EX S-3	EX-P1	14+24.64	12.71' RT	RIVERVIEW HEIGHTS DR	DROP BASIN	1041.01	Type 7	6.49	OUTL EL = 1034.52 - E INL = 1037.58 - S	N=178234.7951 E=620426.8353
S-2	P2 EX-P4	14+23	-5.00' LT	RIVERVIEW HEIGHTS DR	MH TYPE 4 (48")	1042.98	Type 2A	9.10	OUTL EL = 1034.63 - NW OUTL EL = 1033.88 - N INL = 1033.88 - S	N=178217.4844 E=620422.7618
S-4	P5 P6	15+85	-3.00' LT	RIVERVIEW HEIGHTS DR	MH TYPE 4 (48")	1051.36	Type 2A	6.66	OUTL EL = 1045.05 - NE OUTL EL = 1044.70 - NW INL = 1044.70 - SE	N=178300.4651 E=620283.0076
S-5		15+85	10.67' RT	RIVERVIEW HEIGHTS DR	CB TYPE 1	1051.09	Type B	4.19	INL = 1046.90 - SW	N=178310.4614 E=620292.3304
S-6	P10	17+10	0.00'	RIVERVIEW HEIGHTS DR	MH TYPE 4 (48")	1060.77	Type 2A	4.72	OUTL EL = 1056.24 - NE INL = 1056.05 - SE	N=178402.9548 E=620211.6971
S-7	P11	17+10	10.67' RT	RIVERVIEW HEIGHTS DR	CB TYPE 1	1060.54	Type B	4.19	OUTL EL = 1056.35 - NW INL = 1056.35 - SW	N=178407.5268 E=620221.3379
S-8		17+20.45	10.66' RT	RIVERVIEW HEIGHTS DR	CB TYPE 1	1061.38	Type B	4.02	INL = 1057.36 - SE	N=178416.7300 E=620217.1423

Revision comment: —
Revised: —

I hereby certify that this plan was prepared by me or under my direct supervision and that I am a duly Licensed Professional Engineer under the laws of the State of Minnesota. Date: 06/22/16 Lic. No. 24567

City of Rochester, Minnesota
Department Of Public Works
201 4th Street S.E.
Rochester, MN 55904
Phone: (507) 328-2400
FAX: (507) 328-2401

Title: TABULATIONS

Designer: RLW
Checker: RJK

Project No. M7-33 J7261
Sheet 3 of 18 Sheets

\\rochsvr17\pubworks\PROJECTS\J-PROJ\7261\Design\Dwgs\7261.dwg, TABULATIONS, 6/23/2016 10:18:04 AM, 1:2

EXISTING BITUMINOUS PAVEMENT (B)

LOCATION	ALIGNMENT	BITUMINOUS PAVEMENT RECLAMATION	SAW CUT BIT. (FULL DEPTH)
		SQ YD	LIN FT
14+10 TO 24+10	RIVERVIEW HEIGHTS DR NE	2352.9	
TOTAL		2353	39

NOTE:
(1) REMOVAL OF EXCESS BITUMINOUS MATERIAL IS INCIDENTAL
(2) PREPARATION FOR PAVING IS INCIDENTAL

CONSTRUCT ROADWAY (D)

LOCATION	ALIGNMENT	(1) (2) TYPE SP 9.5 WEARING SPWEA230B	(1) (3) TYPE SP 12.5 NON-WEARING SPNWB230B	AGGREGATE BASE (CL 5)
		(TON)	(TON)	(CY)
10+54 TO 14+10	RIVERVIEW HEIGHTS DR NW	73.82		
14+10 TO 24+10	RIVERVIEW HEIGHTS DR NW	165.85	331.69	519.0
24+10 TO 34+00	RIVERVIEW HEIGHTS DR NW	256.72		
		497	332	520

NOTES:
(1) QUANTITIES COMPUTED AT A RATE OF 113/LBS/SQ YD/INCH
(2) TO BE PLACED AT DEPTH OF 1 1/2"
(3) TO BE PLACE AT A DEPTH OF 2 1/2"

TURF ESTABLISHMENT (F)

LOCATION	LOCATION #	ALIGNMENT	LT SIDE	RT SIDE	TOPSOIL BORROW	SODDING TYPE MINERAL
					CU YD	SQ YD
14+42.0 - 24+10	1	RIVERVIEW HEIGHTS DR NE	X		11.61	100.26
14+42.0 - 24+10	2	RIVERVIEW HEIGHTS DR NE		X	87.38	737.78
			TOTALS		99	839

BASIS FOR QUANTITIES
TOPSOIL @ 3 IN DEPTH FOR SODDING

INLET PROTECTION (G)

LOCATION	ALIGNMENT	INLET PROTECTION TYPE C
		EACH
15+85.00 - RT	RIVERVIEW HEIGHTS DR NE	1
17+10.00 - RT	RIVERVIEW HEIGHTS DR NE	1
17+20.45 - LT	RIVERVIEW HEIGHTS DR NE	1
	TOTALS	3

CONST CURB & GUTTER (E)

STATION LOCATION	ALIGNMENT	LT	RT	TYPE B624
14+39.94 to 24+12	RIVERVIEW HEIGHTS DR NE		X	972.0
TOTAL				972

COMMON EXCAVATION
RIVERVIEW HEIGHTS DR

Station	Cut Area (SF)	Fill Area (SF)	Cut Vol (CY)	Fill Vol (CY)	Cum Cut Vol (CY)	Cum Fill Vol (CY)	Net Vol (CY)
14+10.01	5.79	0.00	0.00	0.00	0.00	0.00	0.00
14+25.00	4.61	0.00	3.21	0.00	3.21	0.00	3.21
14+25.00	4.61	0.00	3.21	0.00	3.21	0.00	3.21
14+42.00	8.20	4.76	2.83	1.85	6.04	1.85	4.19
14+50.00	16.70	4.38	4.06	1.67	10.10	3.52	6.58
14+75.00	16.78	1.71	17.05	3.66	27.15	7.18	19.97
15+00.00	16.81	1.06	17.06	1.60	44.22	8.79	35.43
15+25.00	17.34	1.50	17.26	1.47	61.48	10.26	51.21
15+50.00	18.77	0.62	18.22	1.22	79.70	11.48	68.21
15+75.00	21.43	0.42	20.22	0.60	99.92	12.08	87.83
16+00.00	19.81	0.55	20.76	0.56	120.67	12.64	108.03
16+25.00	22.33	1.23	21.27	1.02	141.94	13.66	128.28
16+50.00	24.10	0.85	23.42	1.19	165.36	14.85	150.51
16+75.00	18.44	0.79	21.42	0.95	186.79	15.80	170.99
17+00.00	18.08	2.00	18.43	1.60	205.22	17.40	187.82
17+25.00	17.64	3.54	18.08	3.17	223.30	20.57	202.73
17+50.00	15.15	0.85	16.57	2.52	239.87	23.09	216.78
17+75.00	12.19	1.15	13.78	1.19	253.65	24.27	229.38
18+00.00	14.87	0.93	13.64	1.24	267.29	25.51	241.78
18+25.00	16.15	0.43	15.65	0.79	282.95	26.30	256.65
18+50.00	17.58	0.31	17.10	0.44	300.05	26.73	273.32
18+75.00	20.30	0.01	19.29	0.20	319.34	26.93	292.41

COMMON EXCAVATION
RIVERVIEW HEIGHTS DR

Station	Cut Area (SF)	Fill Area (SF)	Cut Vol (CY)	Fill Vol (CY)	Cum Cut Vol (CY)	Cum Fill Vol (CY)	Net Vol (CY)
19+00.00	23.25	0.00	22.17	0.01	341.52	26.94	314.58
19+25.00	23.81	0.00	23.96	0.00	365.48	26.94	338.54
19+50.00	19.07	18.34	21.84	11.04	387.32	37.98	349.34
19+75.00	19.59	1.28	19.69	11.81	407.00	49.79	357.21
20+00.00	23.23	0.15	21.81	0.86	428.81	50.66	378.15
20+25.00	24.13	0.06	24.12	0.13	452.93	50.78	402.14
20+50.00	25.05	0.07	25.05	0.07	477.97	50.86	427.12
20+75.00	22.87	0.43	24.40	0.30	502.38	51.15	451.22
21+00.00	27.38	0.06	25.59	0.29	527.97	51.44	476.52
21+25.00	25.95	1.96	27.16	1.21	555.12	52.66	502.46
21+50.00	25.56	2.84	26.23	2.89	581.35	55.54	525.81
21+75.00	15.26	2.31	20.79	3.10	602.14	58.64	543.50
22+00.00	7.26	1.89	11.27	2.60	613.41	61.23	552.17
22+25.00	7.12	2.13	7.14	2.45	620.55	63.68	556.87
22+50.00	9.76	2.52	8.39	2.75	628.93	66.43	562.50
22+75.00	15.92	0.42	12.88	1.70	641.81	68.13	573.68
23+00.00	19.29	0.00	17.76	0.24	659.57	68.37	591.21
23+25.00	21.24	0.02	20.46	0.01	680.03	68.38	611.66
23+50.00	21.28	0.00	21.53	0.01	701.56	68.39	633.18
23+75.00	21.35	0.05	21.71	0.03	723.27	68.42	654.85
24+10.00	14.64	4.05	25.18	3.11	748.46	71.53	676.92

Revision comment: —
Revised: —

I hereby certify that this plan was prepared by me or under my direct supervision and that I am a duly Licensed Professional Engineer under the laws of the State of Minnesota.
Date: 06/22/16 Lic. No. 24667

City of Rochester, Minnesota
Department Of Public Works
201 4th Street S.E.
Rochester, MN 55904
Phone: (507) 328-2400
FAX: (507) 328-2401

Title: TABULATIONS
Designer: RLW
Checker: RJK

Project No. M7-33 J7261
Sheet 4 of 18 Sheets

\\rochsvr17\pubworks\PROJECTS\J-PROJ\J7261\Design\Dwgs\7261.dwg, TABULATIONS -2, 6/23/2016 10:18:20 AM, 1:2

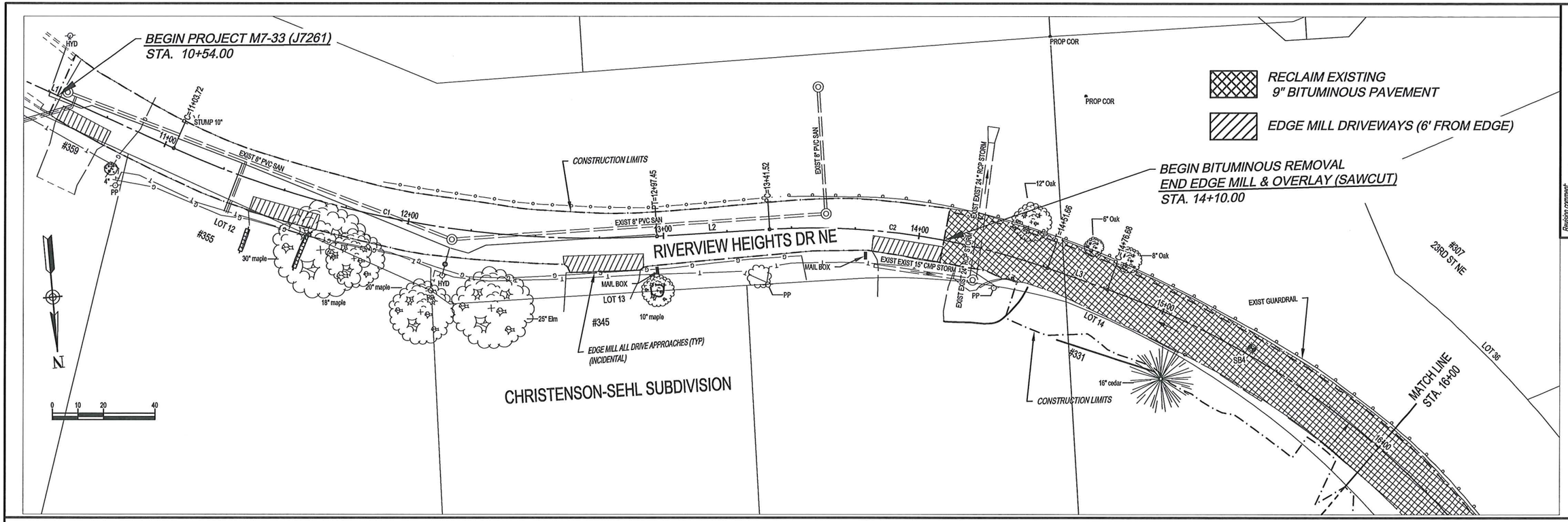

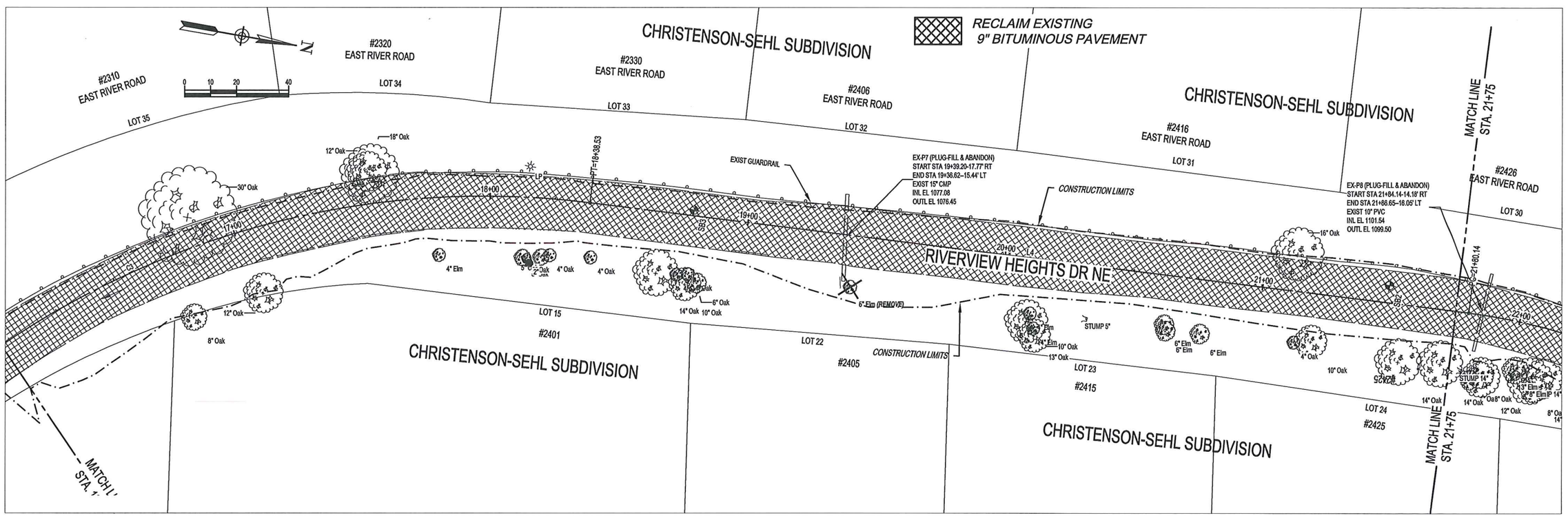

Revision comment: –
Revised: –

I hereby certify that this plan was prepared by me or under my direct supervision and that I am a duly Licensed Professional Engineer under the laws of the State of Minnesota.
Russell J. Klein Date: 06/22/16 Lic. No. 24657

City of Rochester, Minnesota
Department Of Public Works
201 4th Street S.E.
Rochester, MN 55904
Phone: (507) 328-4400
FAX: (507) 328-2401

Title: REMOVALS
Designer: RLW
Checker: RJK

Project No. M7-33 J7261
Sheet 5 of 18 Sheets

\\rochsvr17\pubworks\PROJECTS\J-PROJ\J7261\Design\Dwgs\7261REMOVAL.dwg, 10+25, 6/23/2016 10:19:22 AM, 1:2

END BITUMINOUS REMOVAL
BEGIN EDGE MILL & OVERLAY (SAWCUT)
STA. 24+10.00

RECLAIM EXISTING
9" BITUMINOUS PAVEMENT

EDGE MILL DRIVEWAYS (6' FROM EDGE)

#2520 EAST RIVER ROAD
#2512 EAST RIVER ROAD
#2504 EAST RIVER ROAD
#2445
#2426 EAST RIVER ROAD
#2435
LOT 27
LOT 28
LOT 29
LOT 30
LOT 25
LOT 26

EX-P9
START STA 24+18.80-17.58' RT
END STA 23+78.74-239.74' LT
EXIST 12" CMP
INL EL 1117.99
OUTL EL 1100.00

EXISTING GUARDRAIL
CONSTRUCTION LIMITS
LANDSCAPE AREA
STUMP 36"
STUMP 20"
STUMP 15"
STUMP 28"
8" Oak
16" Oak
7" Oak
26" Oak
13"
12" Oak
8" Oak
8" Elm
3" Elm
14"
8" Oak
7" Oak
PC=24+75.92
PT=24+74.41
PT=25+44.74
PC=21+80
C5
C9
L5
L6
L7
L8
L10
L12
EDGE MILL ALL DRIVE APPROACHES (TYP)
(INCIDENTAL)
RIVERVIEW HEIGHTS DR NE
EXIST 8" PVC SAN
3-COURSE BLK WALL
FOR LANDSCAPE AREA
MAIL BOX
PROP COR
6" SAN
MATCH LINE
STA. 21+75
MATCH LINE
STA. 25+75

EX-P8 (PLUG-FILL & ABANDON)
START STA 21+84.14-14.18' RT
END STA 21+66.65-16.05' LT
EXIST 10" PVC
INL EL 1101.54
OUTL EL 1099.50

END PROJECT M7-33
STA. 34+00

CHRISTENSON-SEHL SUBDIVISION

#2440
#2430
#2424
#2414
#2435
#2425
#2415
#2405
#2402
#2401
LOT 17
LOT 18
LOT 19
LOT 20
LOT 21
LOT 22
LOT 23
LOT 24
LOT 25
LOT 15
LOT 16
LANDSCAPE AREA
14" maple
28" maple
PROP COR
HYD
MAIL BOX
6" SAN
EXIST 8" PVC SAN
EXIST 6" PVC SAN
WOOD RAIL
FOR FENCE
PC=30+18.41
PT=30+12.88
PT=30+88.48
PC=32+37.07
PT=28+07.19
PT=28+71.55
PC=29+35.03
EP=34+00
PT=33+15.40
C9
L7
L8
L10
L12
EDGE MILL ALL DRIVE APPROACHES (TYP)
(INCIDENTAL)

EDGE MILL DRIVEWAYS (6' FROM EDGE)

Revision comment: —
Revised: —

I hereby certify that this plan was prepared by me or under my direct supervision and that I am a duly Licensed Professional Engineer under the laws of the State of Minnesota.
Date: 06/22/16 Lic. No. 24667

City of Rochester, Minnesota
Department Of Public Works
201 4th Street S.E.
Rochester, MN 55904
Phone: (507) 328-2450
FAX: (507) 328-2401

Title: REMOVALS
Designer: RLW
Checker: RJK
Project No. M7-33 J7261
Sheet 6 of 18 Sheets

\\rochsvr17\pubworks\PROJECTS\J-PROJ\J7261\Design\Dwgs\7261REMOVAL.dwg, 21+75, 6/23/2016 10:19:42 AM, 1:2

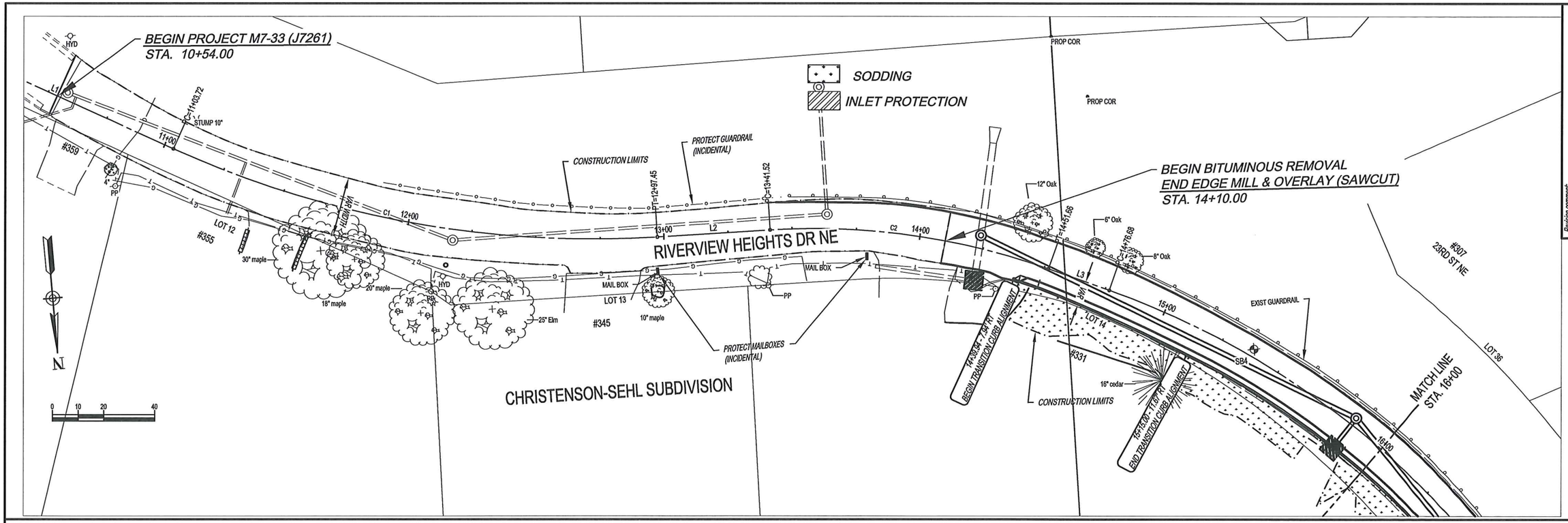

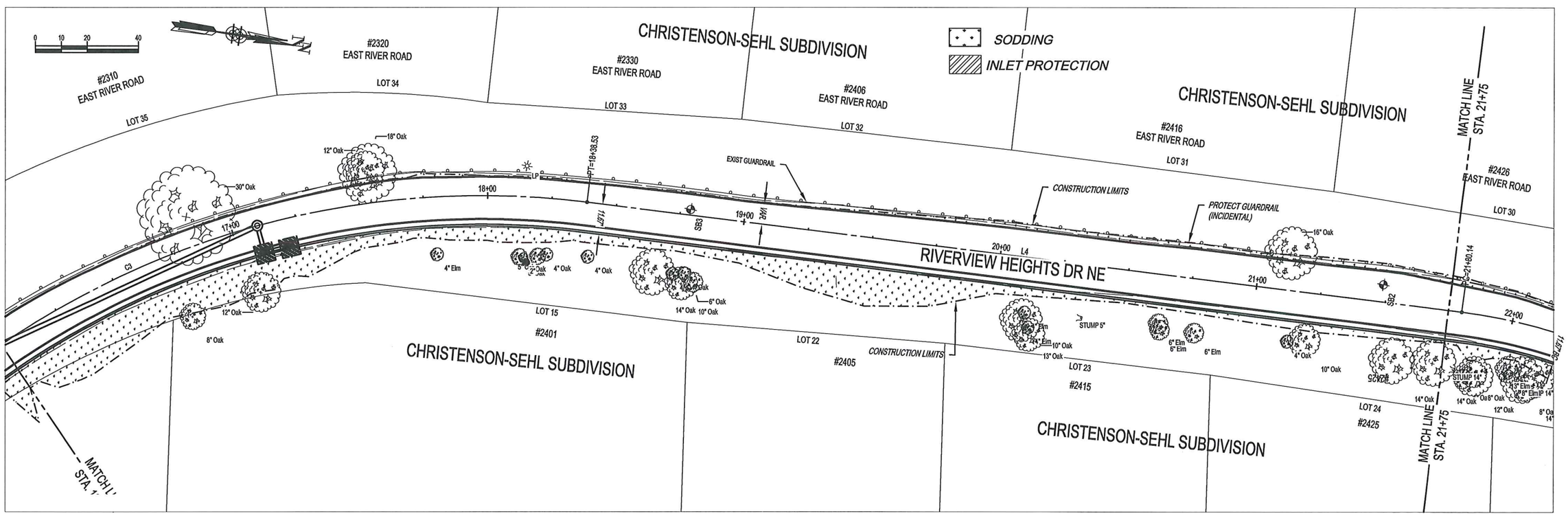

Revision comment: —
Reviewed: —

I hereby certify that this plan was prepared by me or under my direct supervision and that I am a duly Licensed Professional Engineer under the laws of the State of Minnesota.
Russell J. Klein Date: 06/22/16 Lic. No. 24667

City of Rochester, Minnesota
Department Of Public Works
201 4th Street S.E.
Rochester, MN 55904
Phone: (507) 328-2459
FAX: (507) 328-2401

Title: EROSION CONTROL & TURF ESTABLISHMENT

Designer: RLW
Checker: RJK

Project No. M7-33 J7261
Sheet 7 of 18 Sheets

\\rochsvr17\pubworks\PROJECTS\J-PROJ\J7261\Design\Dwgs\7261EROSION.dwg, 10+25, 6/23/2016 10:21:01 AM, 1:2

END BITUMINOUS REMOVAL
BEGIN EDGE MILL & OVERLAY (SAWCUT)
STA. 24+10.00

SODDING
INLET PROTECTION

#2520 EAST RIVER ROAD
#2512 EAST RIVER ROAD
#2504 EAST RIVER ROAD
#2445
#2426 EAST RIVER ROAD
#2435
LOT 27
LOT 28
LOT 29
LOT 30
LOT 25
LOT 26
EXISTING GUARDRAIL
VAR
C1
C4
C5
C6
L5
L6
L1
L2
L3
L4
PC=24+75.92
PT=24+74.41
PC=21+80
PT=25+44.74
PT=23+67.36
PT=23+62.53
11.67'
11.67' BC
STUMP 36"
STUMP 20"
STUMP 28"
STUMP 15"
LANDSCAPE AREA
FB1 SILT FENCE FOR INLET PROTECTION AT CULVERT
RELOCATE LIGHT POLE TO 2' BEHIND CURB
CONSTRUCTION LIMITS
16" Oak
8" Oak
7" Oak
26" Oak
13"
12" Oak
14" Oak
8" Elm
3" Elm
LP
RIVERVIEW HEIGHTS DR NE
EXIST 8" DIP WM
3-COURSE BLK WALL FOR LANDSCAPE AREA
MAIL BOX
PROP COR
6" SAN
MATCH LINE "A" 21+75
MATCH LINE STA. 25+75
21+00
22+00
23+00
24+00
25+00

END PROJECT M7-33
STA. 34+00

CHRISTENSON-SEHL SUBDIVISION
#2440
#2430
#2424
#2414
#2435
#2425
#2415
#2405
#2402
#2401
LOT 17
LOT 18
LOT 19
LOT 20
LOT 21
LOT 22
LOT 23
LOT 24
LOT 25
LOT 15
LOT 16
LANDSCAPE AREA
14" maple
28" maple
HYD
L BOX
EXIST 8" DIP WM
6" SAN
PC=32+37.07
PI=28+07.19
PI=29+71.65
PC=29+38.03
PC=30+18.41
PT=30+12.88
PT=30+68.48
EP=33+79.40
PT=33+79.40
L7
L8
L10
L12
C9
26+00
27+00
28+00
29+00
30+00
31+00
32+00
33+00
34+00
RIVERVIEW HEIGHTS DR NE
WOOD RAIL FENCE

Revision comment: —
Revised: —

I hereby certify that this plan was prepared by me or under my direct supervision and that I am a duly Licensed Professional Engineer under the laws of the State of Minnesota.
Date: 06/22/16 Lic. No. 24667

City of Rochester, Minnesota
Department Of Public Works
201 4th Street S.E.
Rochester, MN 55904
Phone: (507) 328-2450
FAX: (507) 328-2401

Title: EROSION CONTROL & TURF ESTABLISHMENT
Designer: RLW
Checker: RJK
J7261
Project No. M7-33
Sheet 8 of 18 Sheets

\\rochsvr17\pubworks\PROJECTS\J-PROJ\J7261\Design\Dwgs\7261EROSION.dwg, 21+75, 6/23/2016 10:21:22 AM, 1:2

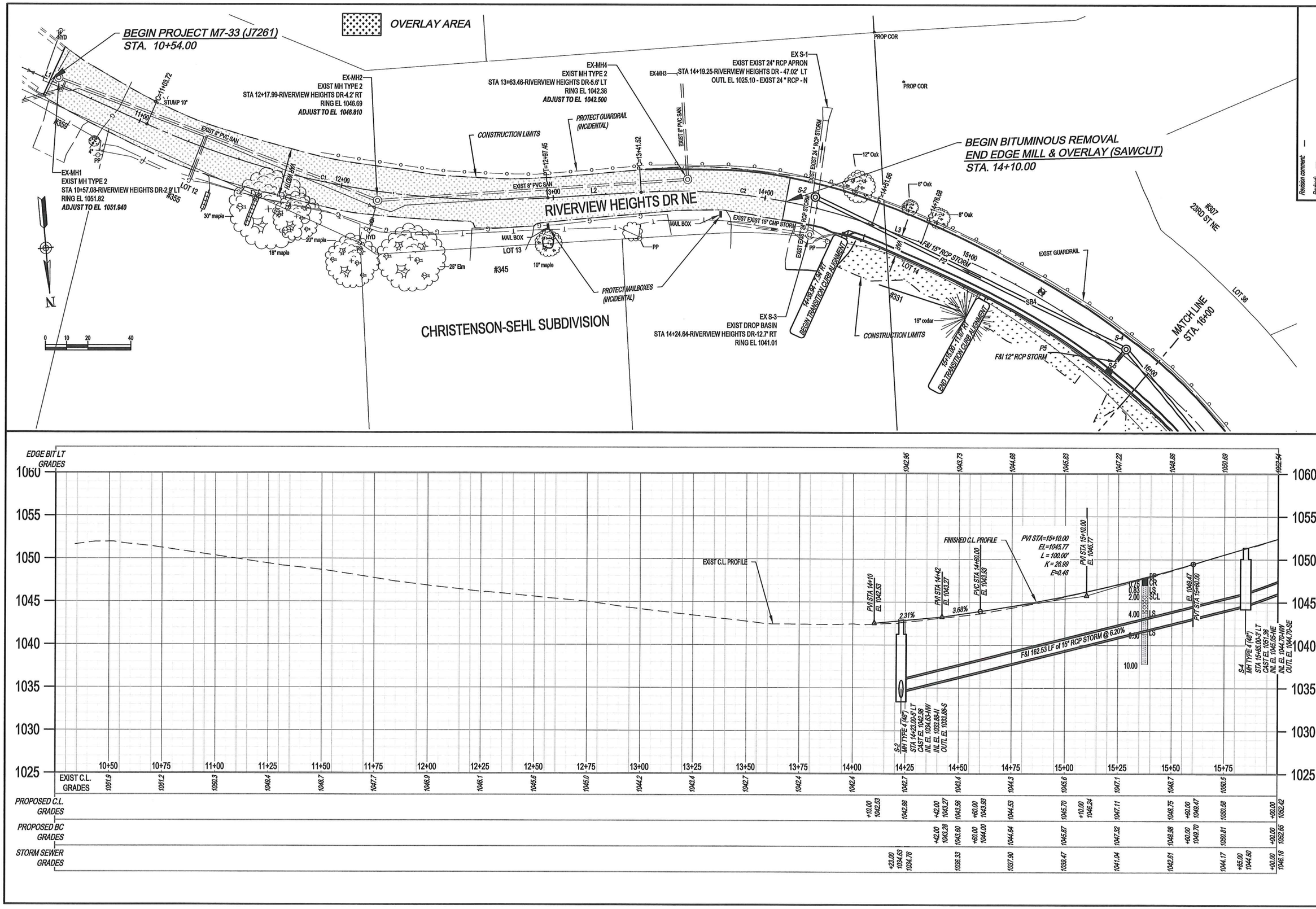

Revision comment: —
Revised: —

I hereby certify that this plan was prepared by me or under my direct supervision and that I am a duly Licensed Professional Engineer under the laws of the State of Minnesota.
Date: 06/22/16 Lic. No. 24667

City of Rochester, Minnesota
Department Of Public Works
201 4th Street S.E.
Rochester, MN 55904
Phone: (507) 328-2450
FAX: (507) 328-2401

Title: UNDERGROUND & GRADING

Designer: RLW
Checker: RJK

J7261

Project No. M7-33
Sheet 9 of 18 Sheets

\\rochsvr17\pubworks\PROJECTS\J-PROJ\J7261\Design\Dwgs\7261.dwg, 10+25, 6/23/2016 10:29:24 AM, 1:2

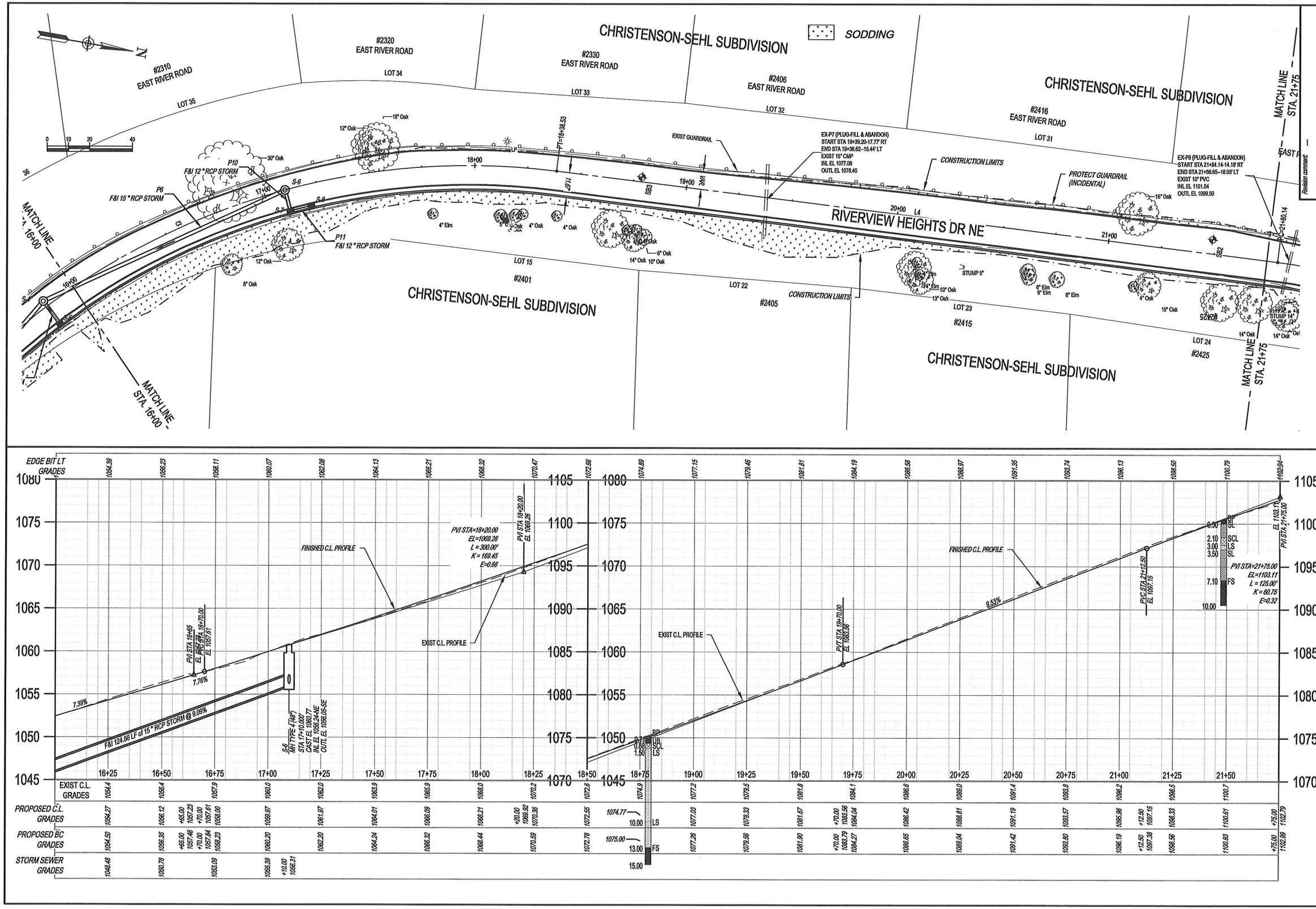

Revision comment: –
Revised: –

I hereby certify that this plan was prepared by me or under my direct supervision and that I am a duly Licensed Professional Engineer under the laws of the State of Minnesota.
Date: 06/22/16 Lic. No. 24667

City of Rochester, Minnesota
Department Of Public Works
201 4th Street S.E.
Rochester, MN 55904
Phone: (507) 328-2450
FAX: (507) 328-2401

UNDERGROUND & GRADING

Designer: RLW
Checker: RJK

Project No. M7-33
J7261
Sheet 10 of 18 Sheets

\\rochsvr17\pubworks\PROJECTS\J-PROJ\J7261\Design\Dwgs\7261.dwg, 16+00, 6/23/2016 10:29:40 AM, 1:2

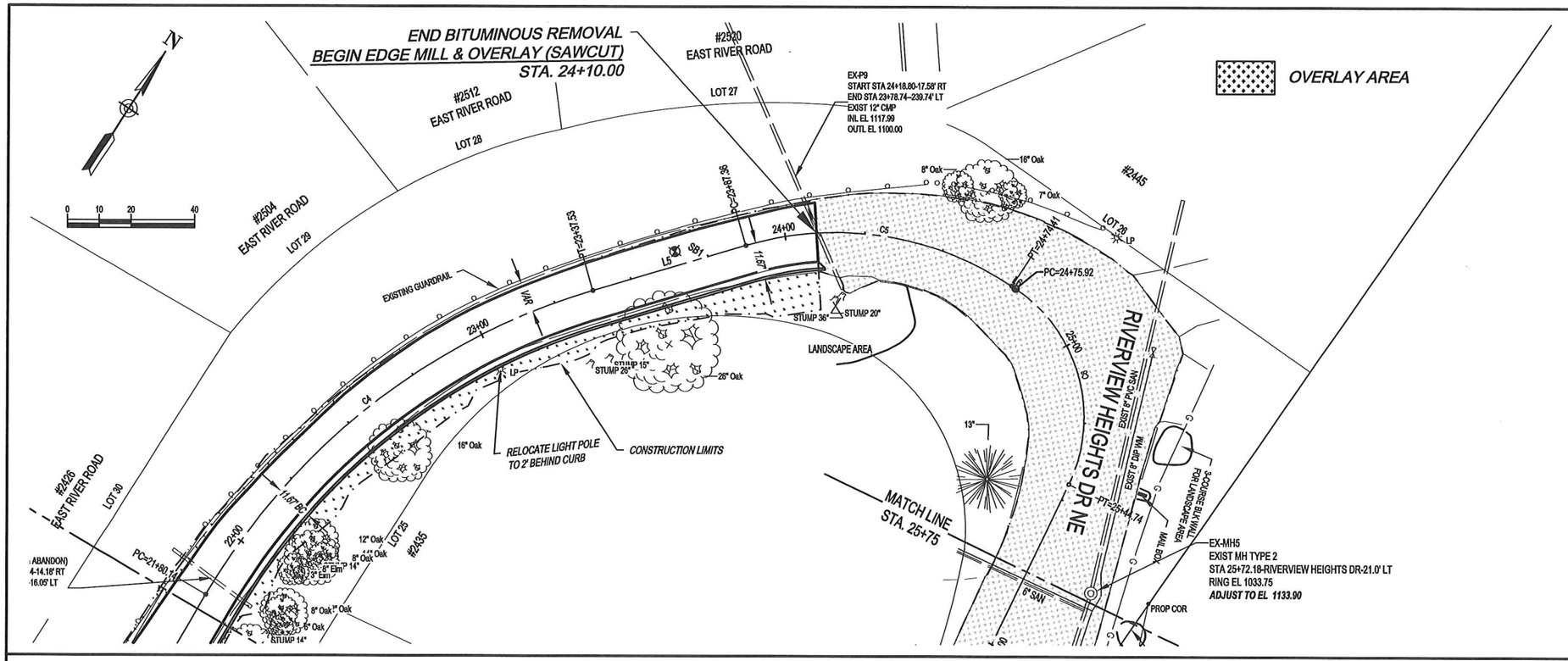

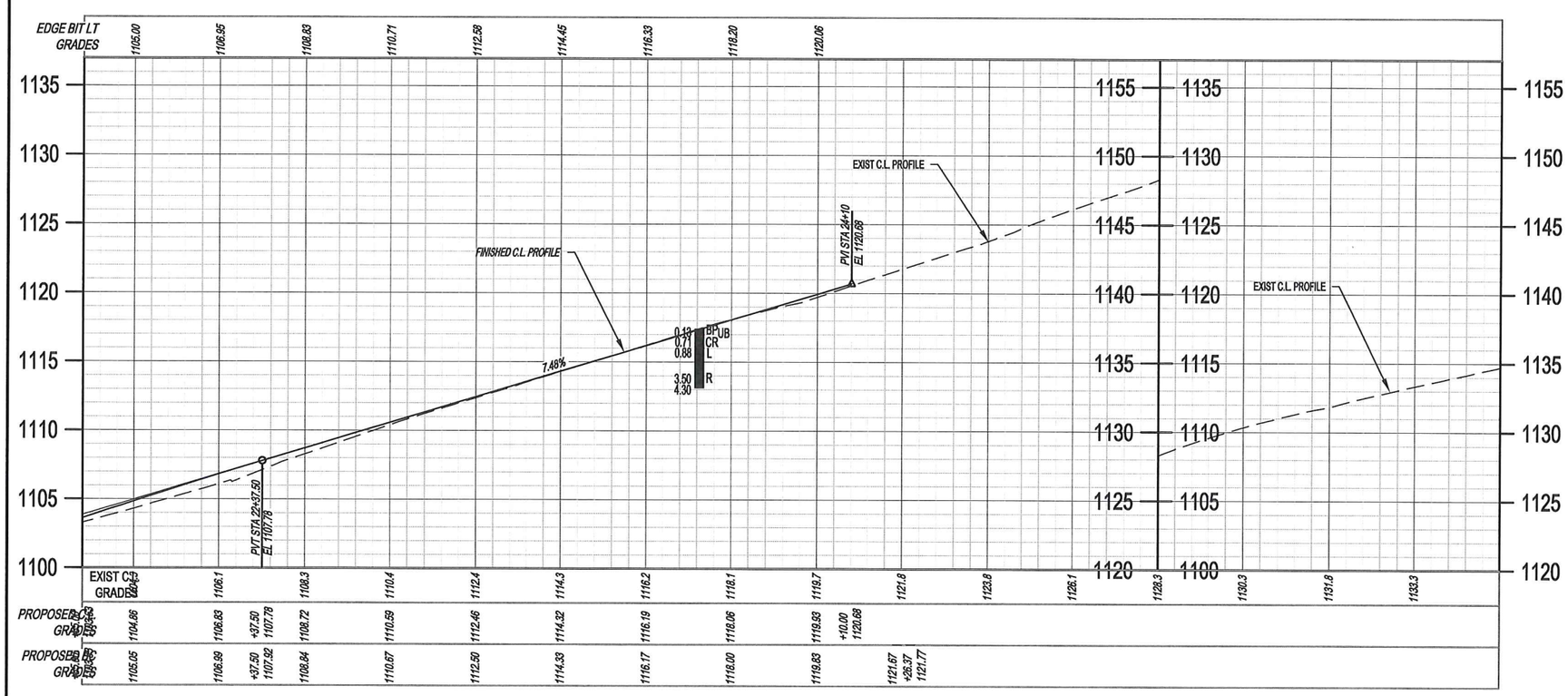

Revision comment: —

Revised: —

I hereby certify that this plan was prepared by me or under my direct supervision and that I am a duly Licensed Professional Engineer under the laws of the State of Minnesota.

Date: 06/22/16 Lic. No. 24667

City of Rochester, Minnesota
Department Of Public Works

201 4th Street S.E.
Rochester, MN 55904
Phone: (507) 328-2459
FAX: (507) 328-2401

Title: UNDERGROUND & GRADING

Designer: RLW

Checker: RJK

Project No. M7-33 J7261

Sheet 11 of 18 Sheets

\\rochsvr17\pubworks\PROJECTS\J-PROJ\J7261\Design\Dwgs\7261.dwg, 21+75, 6/23/2016 10:33:51 AM, 1:2

Revision comment: —

Revision#: —

I hereby certify that this plan was prepared by me or under my direct supervision and that I am a duly Licensed Professional Engineer under the laws of the State of Minnesota.

Date: 06/22/16 Lic. No. 24667

City of Rochester, Minnesota
Department Of Public Works

201 4th Street S.E.
Rochester, MN 55904
Phone: (507) 328-2450
FAX: (507) 328-2401

UNDERGROUND & GRADING

Title:

Designer: RLM

Checker: RJK

J7261

Project No. M7-33
Sheet 12 of 18 Sheets

\\rochsvr17\pubworks\PROJECTS\J-PROJ\J7261\Design\Dwgs\7261.dwg, 28+00, 6/23/2016 10:33:59 AM, 1:2

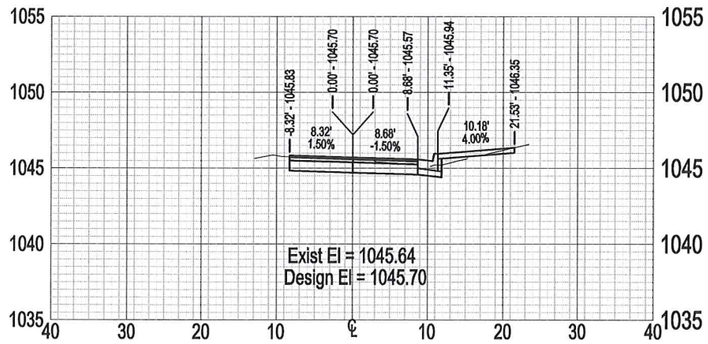

STA. 15+00

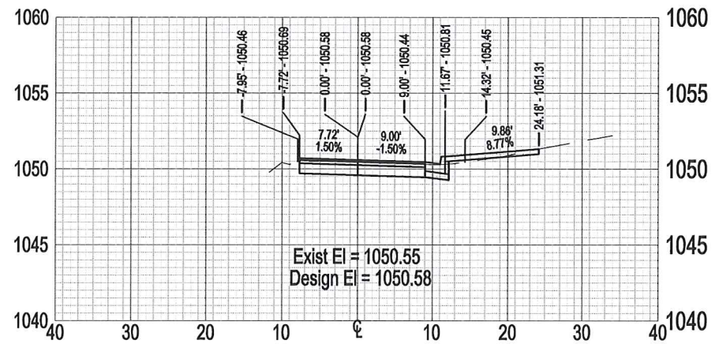

STA. 15+75

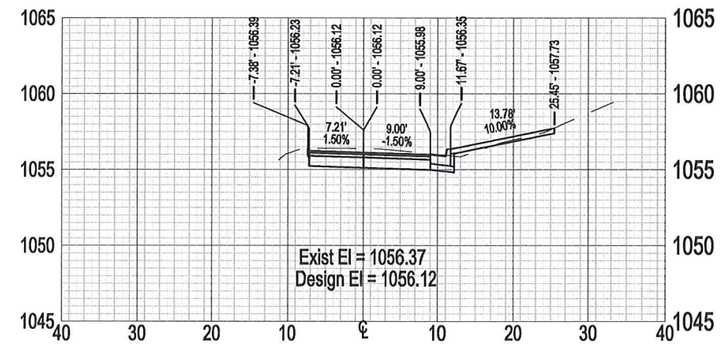

STA. 16+50

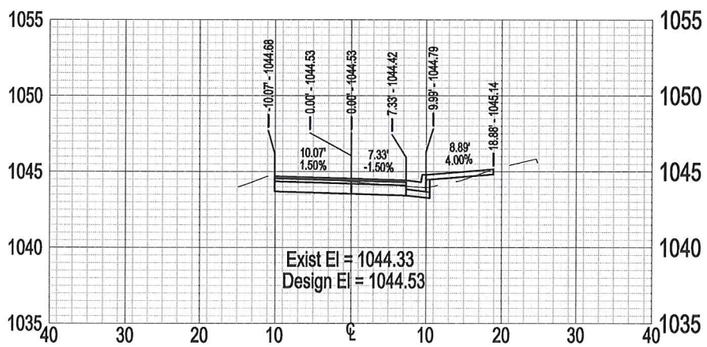

STA. 14+75

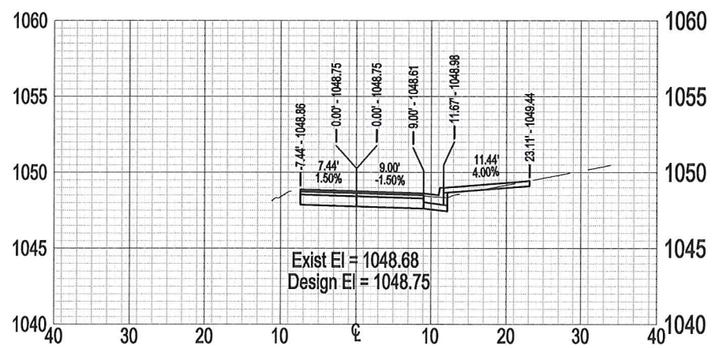

STA. 15+50

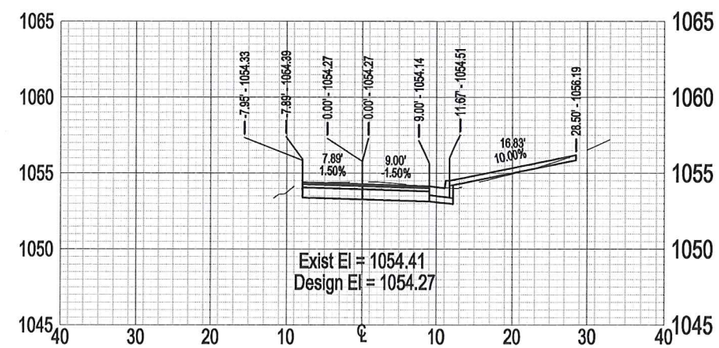

STA. 16+25

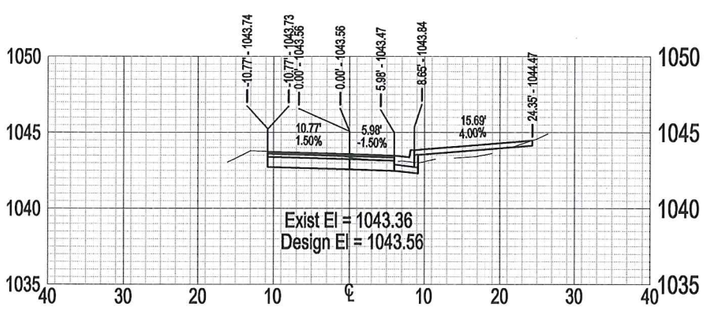

STA. 14+50

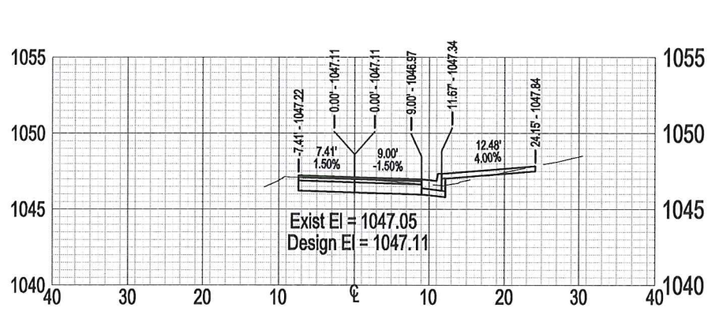

STA. 15+25

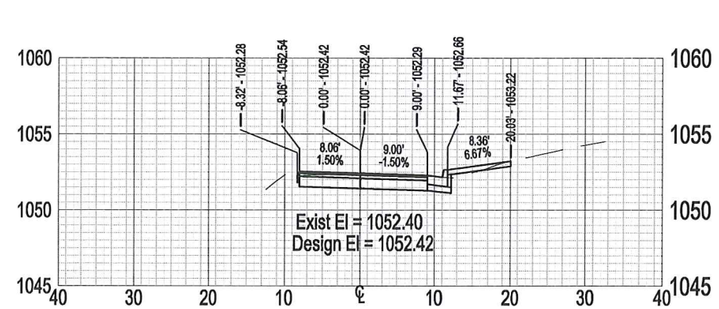

STA. 16+00

Project No. M7-33 J 7261
Sheet 13 of 18 Sheets

\\rochsvr17\pubworks\PROJECTS\J-PROJ\J7261\Design\Dwgs\7261.dwg, XSECT(1), 6/22/2016 1:42:05 PM, 1:1

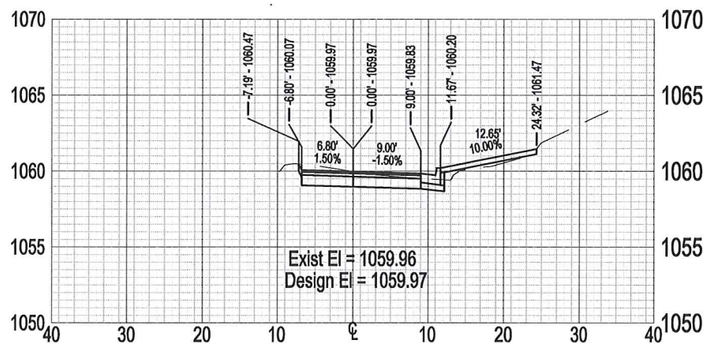

STA. 17+00

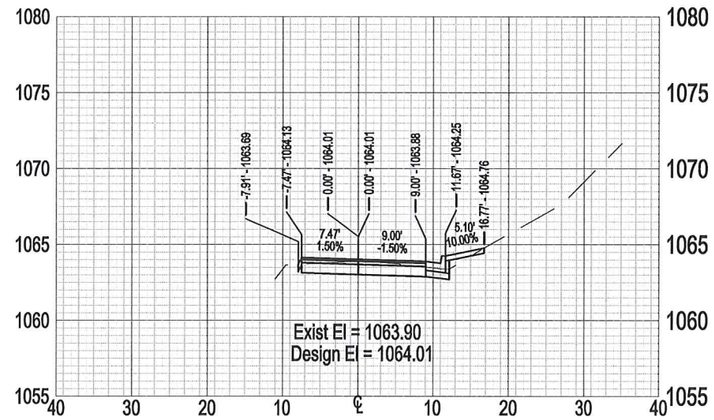

STA. 17+50

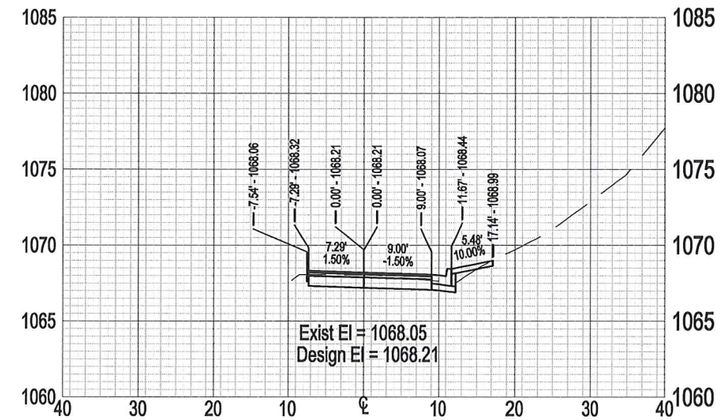

STA. 18+00

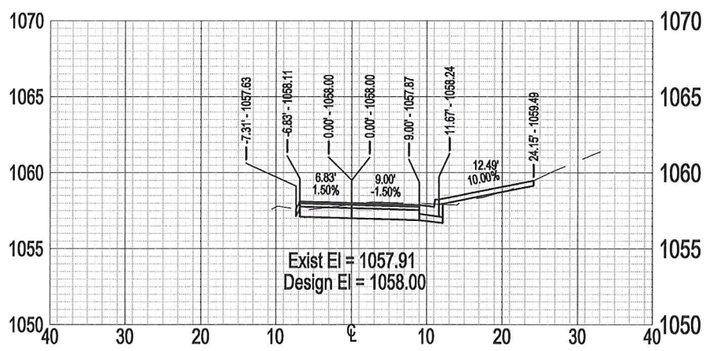

STA. 16+75

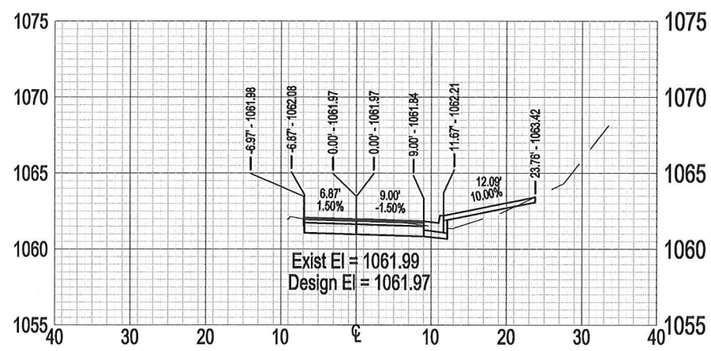

STA. 17+25

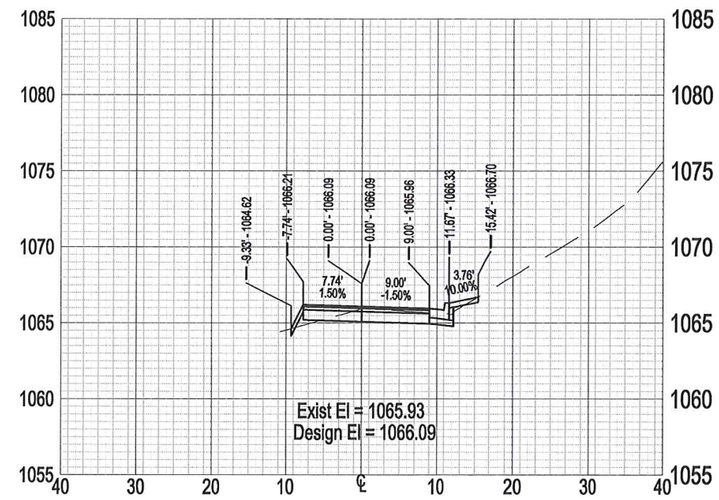

STA. 17+75

Project No. M7-33 J 7261
Sheet 14 of 18 Sheets

\\rochsvr17\pubworks\PROJECTS\J-PROJ\J7261\Design\Dwgs\7261.dwg, XSECT(2), 6/22/2016 1:42:17 PM, 1:1

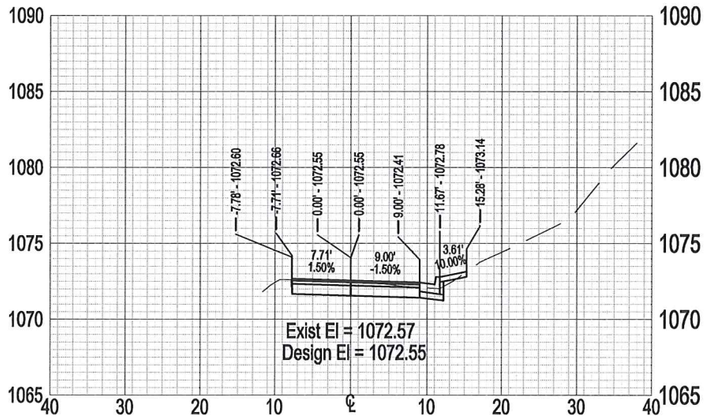

STA. 18+50

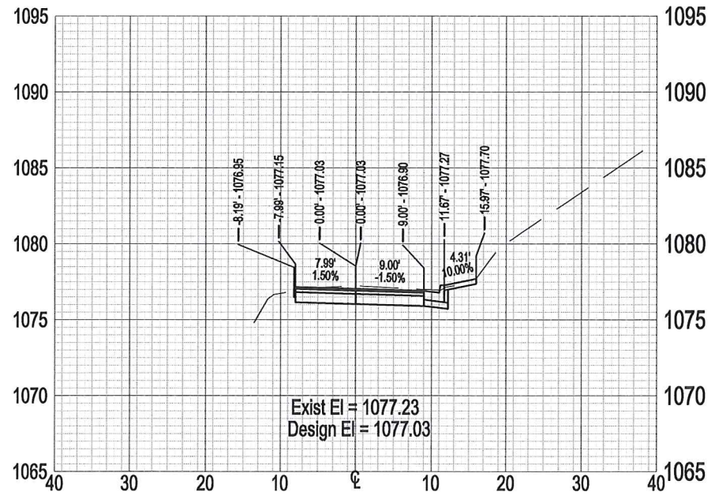

STA. 19+00

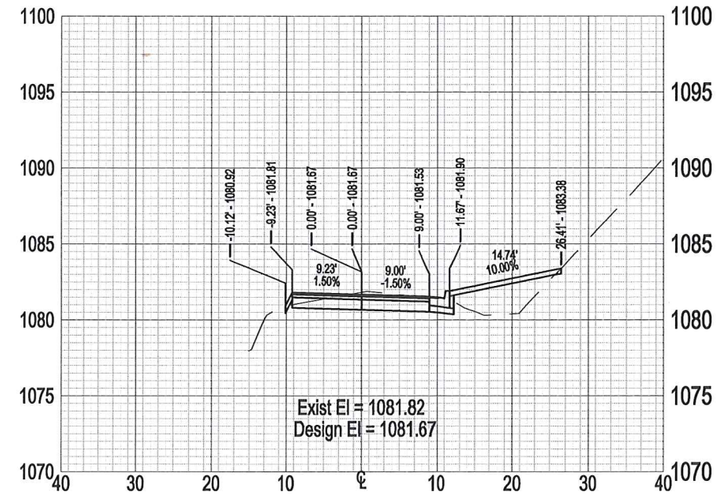

STA. 19+50

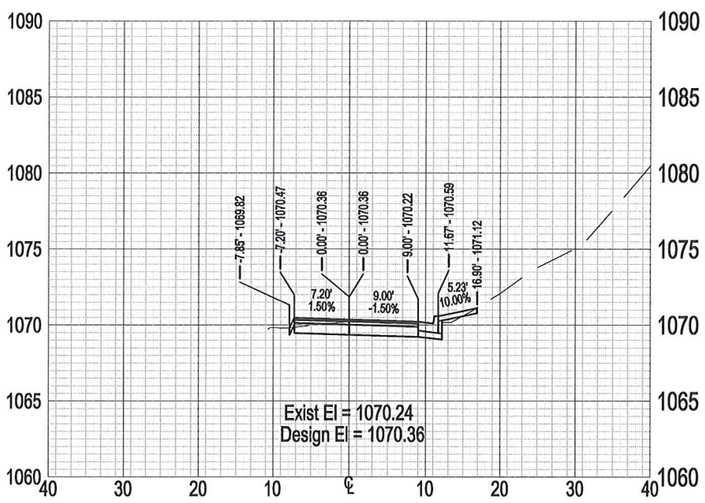

STA. 18+25

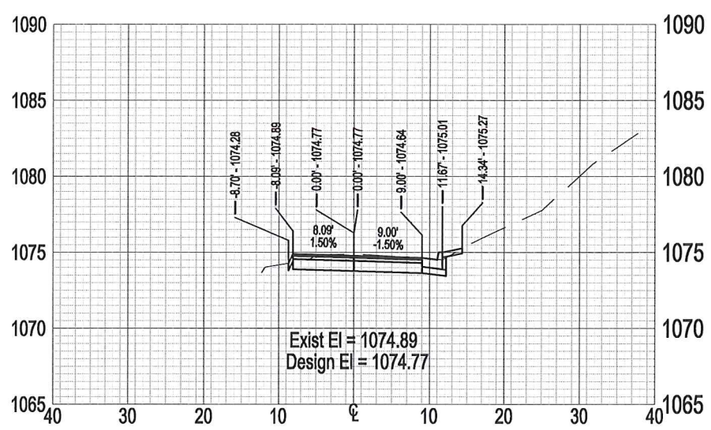

STA. 18+75

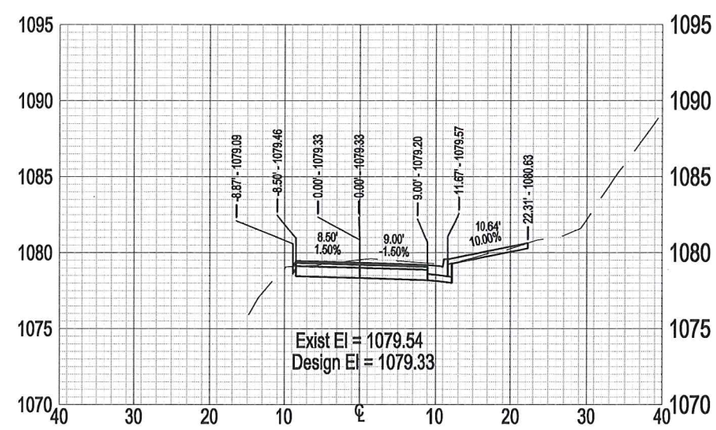

STA. 19+25

Project No. M7-33 J 7261
Sheet 15 of 18 Sheets

\\rochsvr17\pubworks\PROJECTS\J-PROJ\J7261\Design\Dwgs\7261.dwg, XSECT(3), 6/22/2016 1:42:27 PM, 1:1

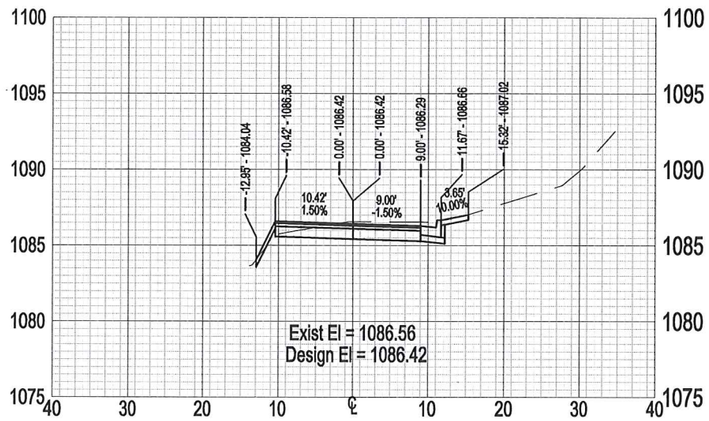

STA. 20+00

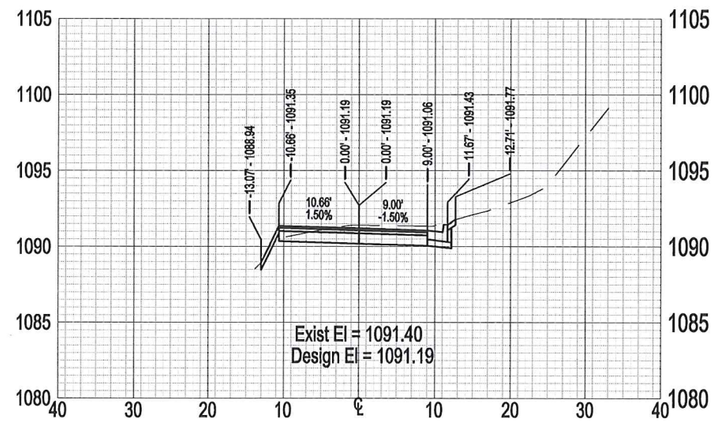

STA. 20+50

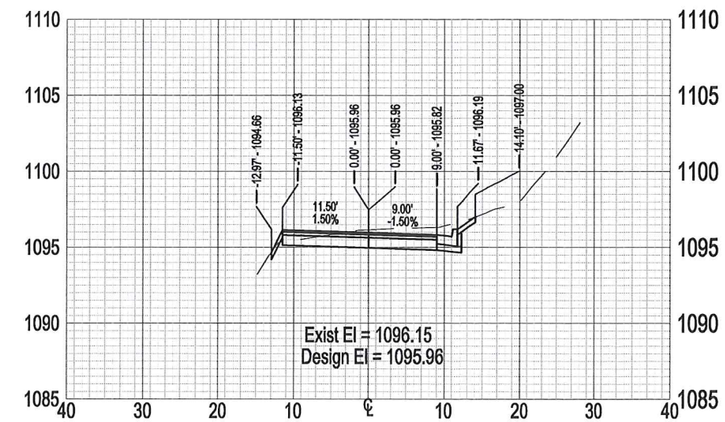

STA. 21+00

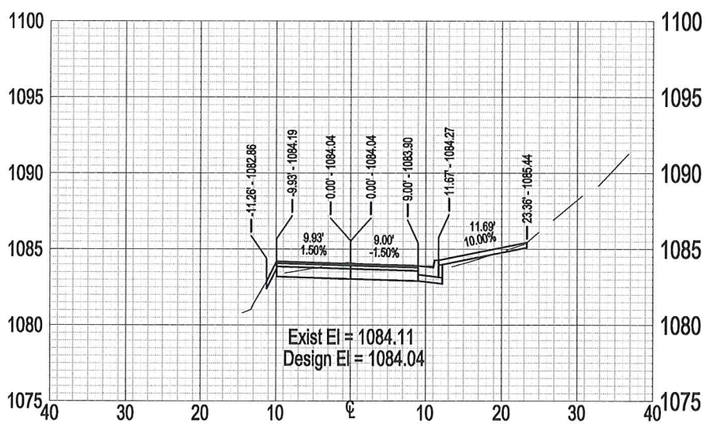

STA. 19+75

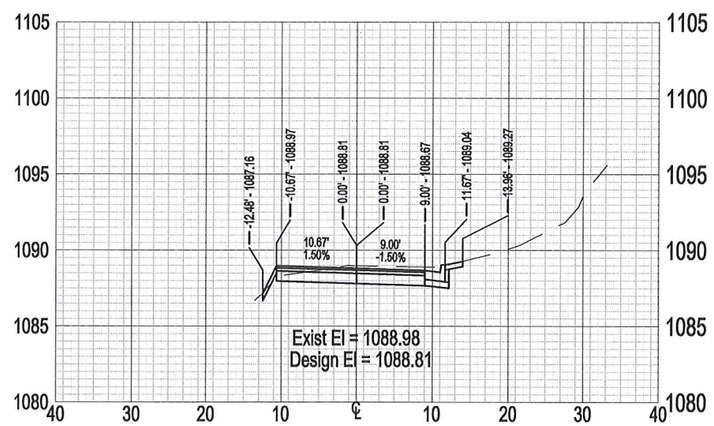

STA. 20+25

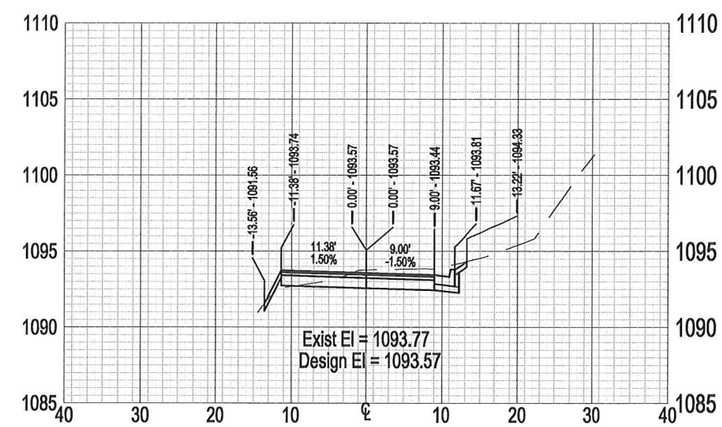

STA. 20+75

Project No. M7-33 J 7261
Sheet 16 of 18 Sheets

\\rochsvr17\pubworks\PROJECTS\J-PROJ\J7261\Design\Dwgs\7261.dwg, XSECT(4), 6/22/2016 1:42:38 PM, 1:1

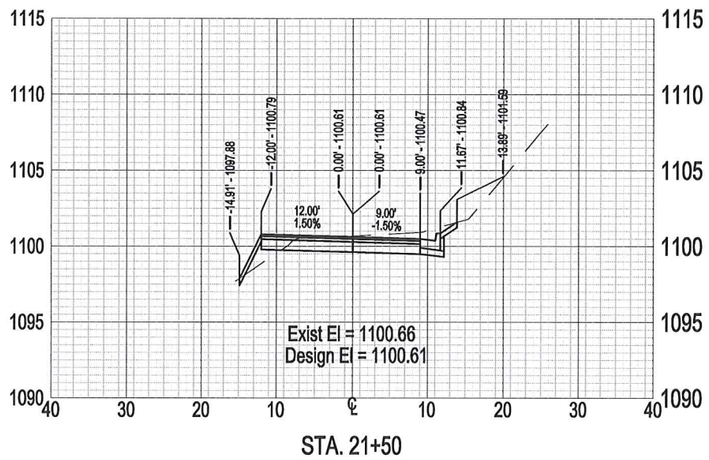

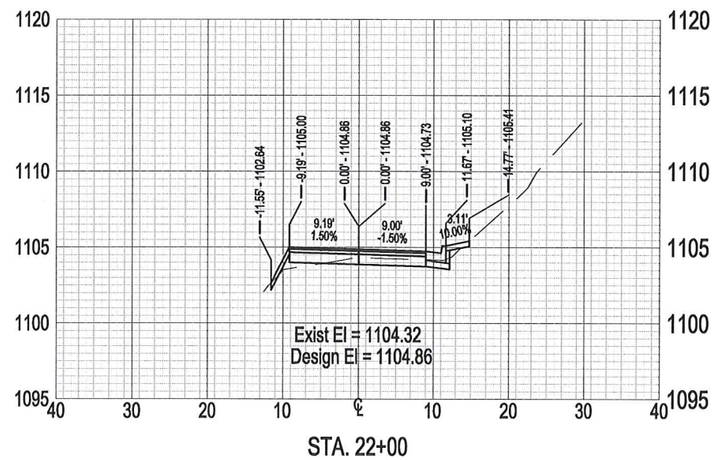

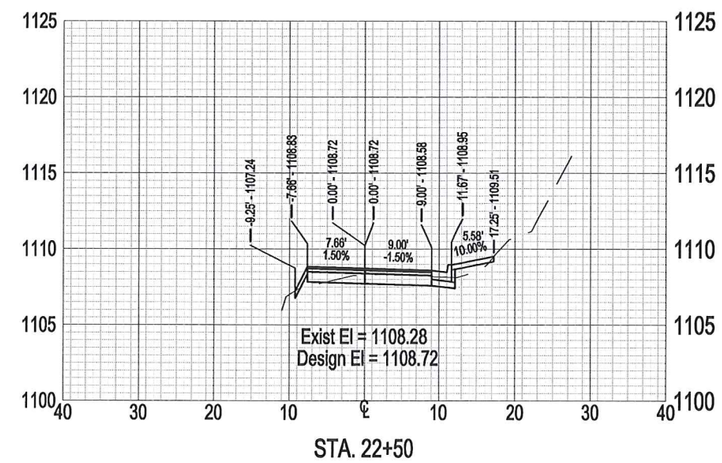

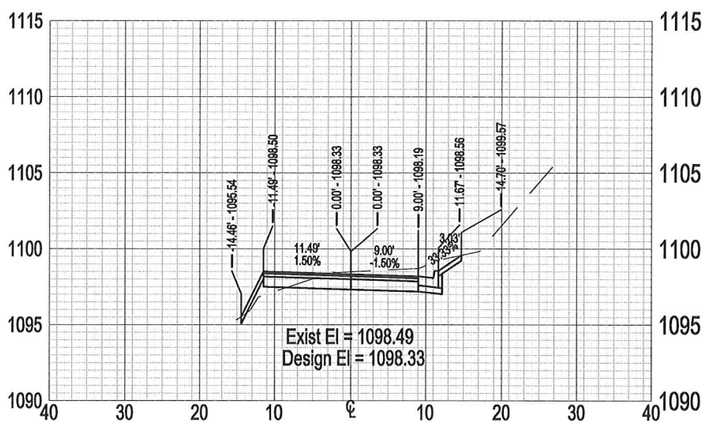

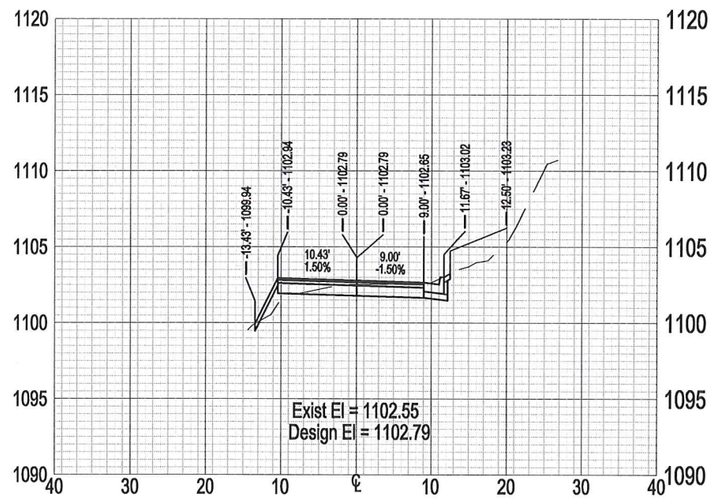

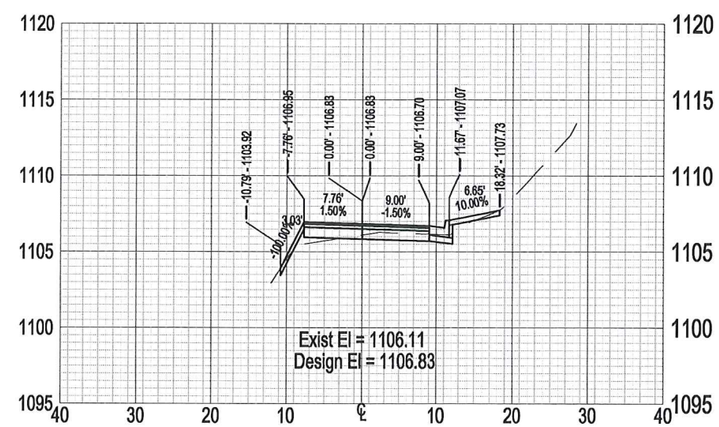

Project No. M7-33 J 7261
Sheet 17 of 18 Sheets

\\rochsvr17\pubworks\PROJECTS\J-PROJ\J7261\Design\Dwgs\7261.dwg, XSECT(5), 6/22/2016 1:42:49 PM, 1:1

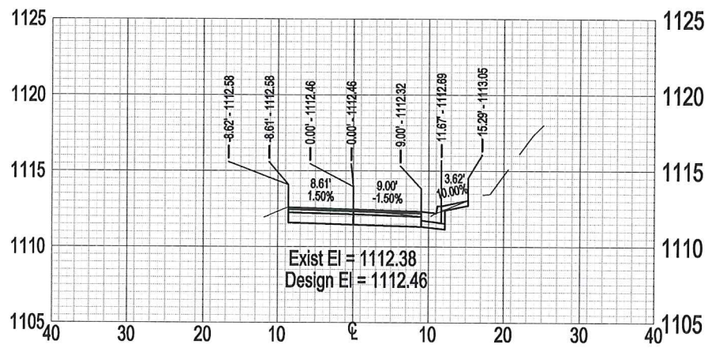

STA. 23+00

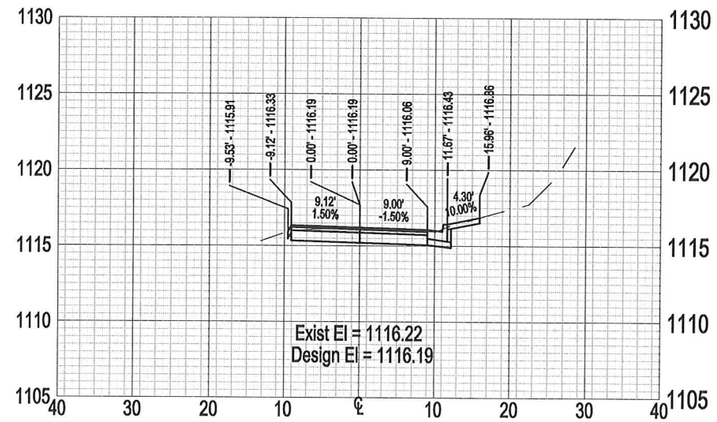

STA. 23+50

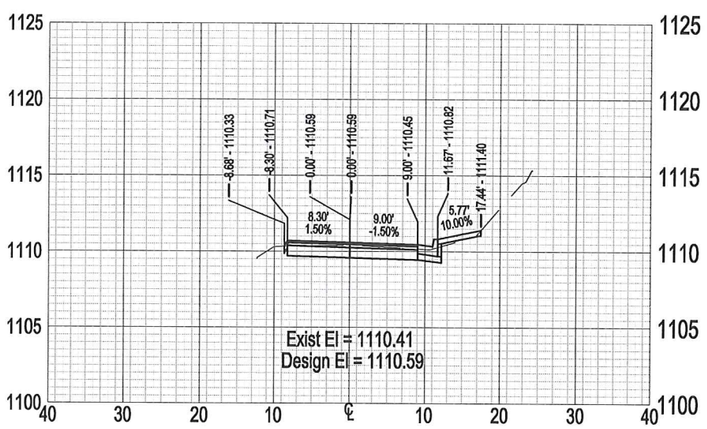

STA. 22+75

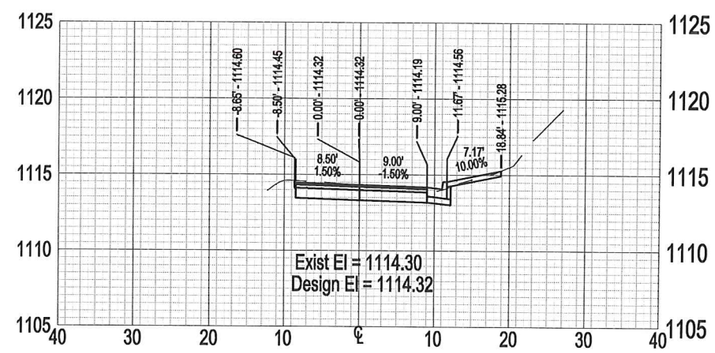

STA. 23+25

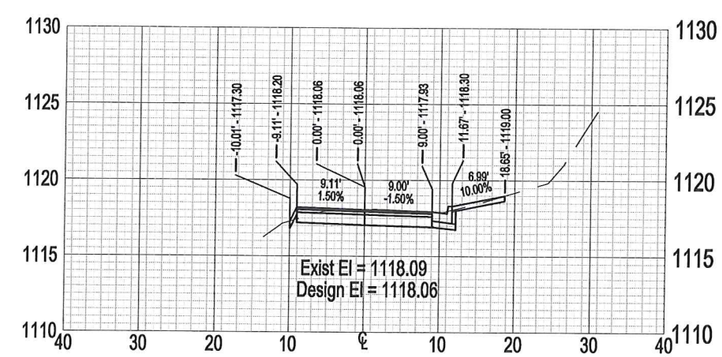

STA. 23+75

Project No. M7-33 J 7261
Sheet 18 of 18 Sheets

\\rochsvr17\pubworks\PROJECTS\J-PROJ\J7261\Design\Dwgs\7261.dwg, XSECT(6), 6/22/2016 2:02:55 PM, 1:1