MINNESOTA DEPARTMENT OF TRANSPORTATION

City of Rochester, Minnesota

Department Of Public Works

TRAFFIC CONTROL SIGNAL SYSTEM AT SOUTH BROADWAY
AND 3RD STREET SOUTH

TOWNSHIP 106 **RANGE** 14 **SECTION** 2

GROSS LENGTH	NA	FEET	NA	MILES
BRIDGE LENGTH	NA	FEET	NA	MILES
EXCEPTION LENGTH	NA	FEET	NA	MILES
NET LENGTH	NA	FEET	NA	MILES

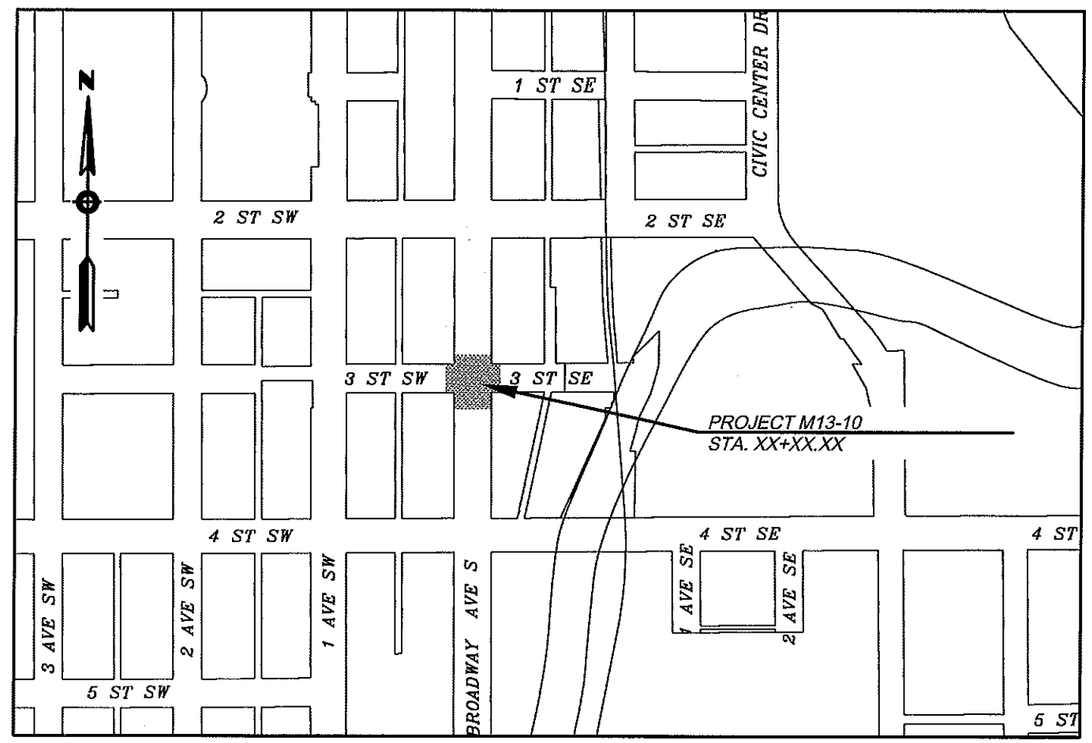

City of Rochester and surrounding area

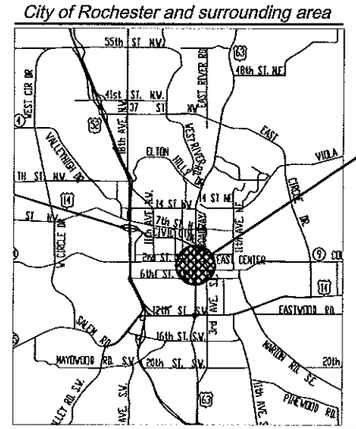

APPROXIMATE PROJECT LOCATION

LEGAL DESCRIPTION:

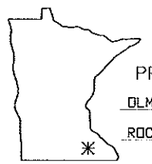

PROJECT LOCATION
OLMSTED COUNTY
ROCHESTER DISTRICT

CONVENTIONAL SIGNS AND ABBREVIATIONS

CORPORATE LIMITS	
SECTION LINE	
RIGHT OF WAY LINE (STATE)	
PROPERTY LINE (STREET)	
ADDITION LINE	
SURVEY LINE	.1 .2
CENTER LINE	
WIRE FENCE	
STONE WALL OR FENCE	
HEDGE	
GUARD RAIL	
CREEK OR RIVER	
DRY RUN	
RAILROAD	
RAILROAD RIGHT OF WAY LINE	
CURB & GUTTER INP.	
SIDEWALK INP.	
SANITARY SEWER INP.	
STORM SEWER INP.	
WATERMAIN, GATEVALVE & BOX INP.	
ELECTRIC UNDERGROUND INP.	E
TELEPHONE UNDERGROUND INP.	T
STEAM MAIN INP.	S
GAS MAIN INP.	
CURB INP.	
HYDRANT INP.	
TELEPHONE, POWER POLES	
LIGHT POLES	
TRAFFIC SIGNAL	
FIRE ALARM BOX	
RAILROAD CROSSING SIGN	RXR
RAILROAD CROSSING BELL	
TREE	
STUMP	
BUILDING	I-S-F
IRON PIPE	
STONE MONUMENT	
MANHOLE INP.	
BRICK INP.	
BRIDGE INP.	
CULVERT INP.	
CATCH BASIN INP.	
CURB & GUTTER CONST.	
SIDEWALK CONST.	
SANITARY, STORM SEWER CONST.	
WATERMAIN CONST.	
MANHOLE CONST.	
CATCH BASIN CONST.	
HYDRANT CONST.	
CROSS	
TEE	
TAPPING MACHINE SLEEVE & VALVE	
BEND, ELBOW	
INCREASER, DECREASER	
CONCRETE	
SAND	
CRUSHED ROCK	R
BITUMINOUS	
CLEAR & GRUB TREE	
SW, C&G, CONC BASE, DRWY-REMOVE(GRD & ALIGN)	
SW, C&G, CONC BASE, DRWY-REMOVE(CONDEMED SW)	
SOIL BORING LOCATION	NO. 2

ACRE	A.
ADJUST	ADJ.
AGGREGATE	AGG.
APPROACH	APP.
BENCH MARK	B.M.
BITUMINOUS	BIT.
BRIDGE	BR.
BUILDING	BLDG.
CAST IRON PIPE	C.I.P.
CATCH BASIN	C.B.
CENTER LINE	℄
CENTER TO CENTER	C TO C
CLAY SEWER PIPE	C.S.P.
CONCRETE	CONC.
CONSTRUCT	CONST.
CORNER	COR.
CORRUGATED METAL PIPE	C.M.P.
CORRUGATED METAL PIPE ARCH	C.M.P.-A
CRUSHED ROCK	CR. RK.
CURB & GUTTER	C & G
DEFLECTION LEFT	D L
DEFLECTION RIGHT	D R
DEGREE OF CURVE	D
DELTA OR INTERSECTION ANGLE	Δ
DRIVE	DR.
DRIVEWAY	DRWY.
DROP INLET	D.I.
DUCTILE IRON PIPE	D.I.P.
EAST	E.
ELEVATION	EL.
ENBANKMENT	EMB.
ENTRANCE	ENT.
EQUATION	EQ.
ESTIMATE	EST.
EXCAVATION	EXC.
EXPANSION	EXP.
FLOW LINE	F.L.
FOOT	FT.
FOUNDATION	FD'N.
FRAME	FR.
FURNISH AND INSTALL	F. & I.
GALLON	GAL.
GATEVALVE	GV
GRATE	GR.
HIGH WATER	H.W.
HIGHWAY	HWY.
HORIZONTAL	HORIZ.
HYDRANT	HYD.
INLET	INL.
INPLACE	INPL.
INSTALL	INST.
INVERT	INV.
IRON PIPE	I. P.
JUNCTION	JCT.
LEFT	LT.
LENGTH OF CURVE	L.
LINEAL	LIN.
LOW WATER	L.W.
MANHOLE	M.H.
MINIMUM	MIN.
MISCELLANEOUS	MISC.
MONUMENT	MON.
NORTH	N.
NORTH EAST	N.E.
NORTH WEST	N.W.
NUMBER	NO.
OUTLET	OUTL.
PERFORATED	PERF.
POINT OF CURVATURE	P.C.
POINT OF INTERSECTION	P.I.
POINT OF TANGENCY	P.T.
POINT ON TANGENT	P.O.T.
RADIUS, ROCK, RANGE	R.
RAILROAD	R.R.
REINFORCED	REINF.
REINFORCED CONCRETE PIPE	R.C.P.
RETURN	RET.
RIGHT	RT.
SANITARY	SAN.
SEWER	SEW.
SIDEWALK, SOUTH WEST	S.W.
SOUTH	S.
SOUTH EAST	S.E.
SPECIFICATION, SPECIAL	SPEC.
STANDARD	STD.
STATION	STA.
STORM, STATE, STUCCO	ST.
STREET, STONE, STEEL	ST.
SUBDRAIN	SD,SUBD
SURFACE	SURF.
TANGENT	TAN.
TURNING POINT, TELEPHONE POLE	T.P.
VARIABLE	VAR.
VEHICULAR MEASURE	V.M.
VERTICAL	VERT.
VERTICAL CURVE	V.C.
VETRIFIED	VIT.
WEST, WATER	W.

NOTE: SECTION NUMBERS READ FROM SOUTH

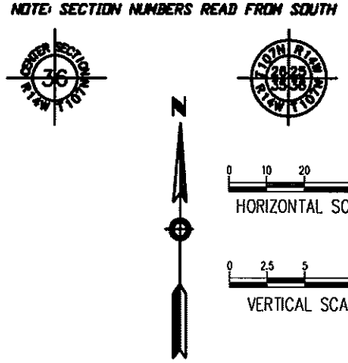

GOVERNING SPECIFICATIONS

State of Minnesota
The 2005 edition of the Minnesota Department of Transportation "Standard Specifications for Construction" shall govern except as modified by special provision.

UTILITY QUALITY LEVEL

The subsurface utility information in this plan is utility quality level D
This quality level was determined according to the guidelines of CI/ASCE 38-2, entitled "Standard Guidelines for the Collection and Depiction of Existing Subsurface Utility Data."

		SOUTH BROADWAY	3RD ST SOUTH
ADT (Current Year)	2013	22,490	800
ADT (Future Year)	2033	22,990	820
HCADT (Future Year)	2033	5.9%	5.9%
DESIGN LOADING		10 - TON	9 - TON
R - VALUE			
SIGMA N_{18} (20)		2,017,000	198,000
FUNCTIONAL CLASSIFICATION		ARTERIAL	LOCAL
NO. AND WIDTH OF TRAFFIC LANES		2 @ 12 FT	2 @ 12 FT
NO. AND WIDTH OF PARKING LANES		2 @ 8 FT	
DESIGN SPEED		30 MPH	30 MPH
BASED ON SIGHT DISTANCE		STOPPING	
HEIGHT OF EYE		3.5 FT	3.5 FT
HEIGHT OF OBJECT		2.0 FT	2.0 FT
STOP CONDITION AT:			

DESIGN SPEED NOT ACHIEVED AT:
STA. _____ TO . STA. _____ ___ MPH

INDEX TO PLANS

Sheet Title	Sht. No.
TITLE SHEET	1
ESTIMATED QUANTITIES	2
DETAILS	2
REMOVALS	3
GRADING	4
SIGNAL PLANS	5-10

This plan contains 11 Total sheets

City of Rochester, Minnesota
Department Of Public Works

201 4th Street S.E.
Room 108 - City Hall
Rochester, MN 55904
Phone: (507) 328-2400
Fax: (507) 328-2401

Calvin Feine , Design Technician — Date

Russell Kelm

Russell Kelm, Design Engineer: I hereby certify that this plan was prepared by me or under my direct supervision, and that I am a duly Licensed Professional Engineer under the laws of the state of Minnesota.
Date: 6-11-13 Registration Number 24667

Douglas A. Nelson 6/11/13
Approved: Douglas Nelson, Assist. City of Rochester Engineer — Date

Richard W. Freese 6/12/13
Approved: Richard Freese, City of Rochester Engineer — Date

Recommended for Approval: — Date

District State Aid Engineer: Reviewed for Compliance with State-Aid Rules/Policy — Date

State Aid Engineer: Approved for Federal & State Aid Funding — Date

S.A.P. No. ----
Project No M13-10 J 6021
Sheet 1 of 11 Sheets

ELECTRONIC FILE

FULL DEPTH REPAIR (TYPE CD-LV)

DESCRIPTION: REMOVE CONCRETE, PLACE REINFORCEMENT BARS AND DOWELS, FURNISH AND PLACE CONCRETE, SAW AND SEAL JOINTS.

PLAN VIEW

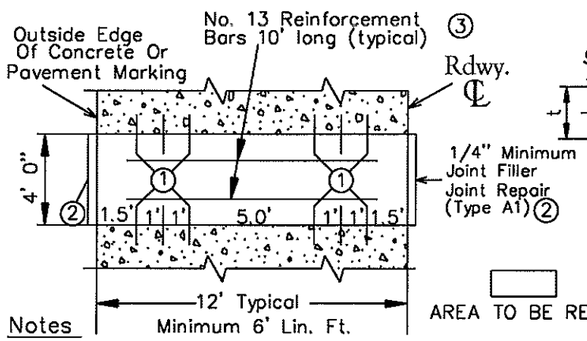

PROFILE VIEW

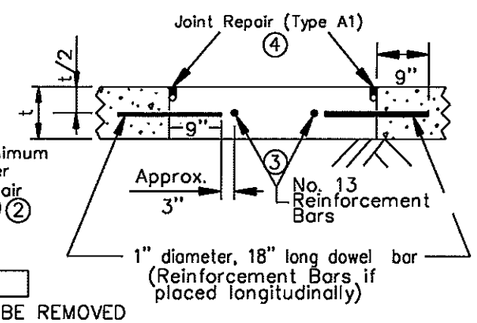

AREA TO BE REMOVED

Notes

* When repairing random cracks on newly constructed concrete pavements, contact the Concrete Engineering Unit for recommendations.
* When the roadway width is 16' or greater, add an additional set of 4 dowels. Install additional dowels at mid point of the roadway.
* This repair is also used on tied longitudinal joints (2' on each side of the joint). Replace dowels with 18" long No. 13 epoxy coated reinforcement bars. Furnish and install reinforcement bars (epoxy coated) at 2' Centers. Install 1/2" joint filler at the up and down stream ends of the longitudinal repair. ②
* If repair is placed over an existing skewed contraction joint, match existing contraction joint skew, unless otherwise allowed by the Engineer.

WORK TO BE DONE

1. Saw cut to full depth and remove concrete pavement. Restore and compact in place base.
2. Drill in place concrete for dowels or epoxy coated reinforcement bars (long. repairs). ①
3. Furnish and install dowels or reinforcement bars Secure the dowel bars or reinforcement bars to the in place concrete by using an approved non shrink grout or epoxy. ① Coat free end of dowel bars with a form coating material meeting Spec. 3902.
4. Clean the vertical surfaces of the in place concrete.
5. Furnish and install joint filler. ②
6. Furnish and place Concrete Mix Number 3A32.
7. Furnish and install reinforcement bars in plastic concrete, 3" from end of dowel bar at mid depth. ③
8. Vibrate, finish to grade and slope, edge, texture, and apply cure.
9. Saw and seal joints in accordance with Joint Repair (Type A1) detail. ② ④ (Incidental)

BASIS OF PAYMENT

2302 Full Depth Repair (Type CD-LV) (Lin. Ft.)

DATE: NOV-14-2011

STATEMENT OF ESTIMATED QUANTITIES

NOTES	SPEC. REF. NUMBER	ITEM DESCRIPTION	UNIT	PARTICIPATING	NON-PARTICIPATING	STORM SEWER	TOTAL ESTIMATED QUANTITY
	1 STREET (350)						
	2021.501/00010	MOBILIZATION	LS	1.00			1.00
	2104.501/00022	REMOVE CURB AND GUTTER	L F	28.00			28.00
	2104.505/00013	REMOVE CONCRETE MEDIAN	S Y	1.50			1.50
	2104.523/00539	SALVAGE SIGN	EACH	15.00			15.00
	2302.603/34010	FULL DEPTH REPAIR (TYPE CD-LV)	L F	82.00			82.00
1	2331.604/00010	REPLACE TRENCH PAVEMENT	S Y	12.00			12.00
	2531.501/02320	CONCRETE CURB & GUTTER DESIGN B624	L F	28.00			28.00
	2531.503/00013	CONCRETE MEDIAN (NOSE)	S Y	1.50			1.50
	2563.601/00010	TRAFFIC CONTROL	LS	1.00			1.00
	2582.502/51112	12" SOLID LINE WHITE-EPOXY (WR)	L F	350.00			350.00
	2 PED FACILITIES (550)						
	2104.503/00021	REMOVE CONCRETE WALK	S F	2,781.00			2,781.00
	2521.501/00060	6" CONCRETE WALK	S F	2,781.00			2,781.00
	2531.618/00010	TRUNCATED DOMES	S F	64.00			64.00
	4 TRAFFIC (650)						
	2104.509/00021	REMOVE LIGHT BASE FOUNDATION	EACH	3.00			3.00
	2104.523/00421	SALVAVGE LUMINAIRE	EACH	3.00			3.00
	2565.511/00010	TRAFFIC CONTROL SIGNAL SYSTEM	SIGS	1.00			1.00
	2565.603/05910	INSTALL 6 PR #19 INTERCONNECT	L F	500.00			500.00

ESTIMATED QUNATITIES NOTES:
(P) PLANNED QUANTITY
(1) BITUMINOUS MATERIAL FOR TACKCOAT INCIDENTAL

REMOVE CONCRETE, REPAIRS & RESTORATION

STATION LOCATION	FULL DEPTH REPAIR (CD-LV)(LF)	SIDEWALK (SF)	CURB (LF)	CONC. MEDIAN (SY)	REPLACE TRENCH PAVEMENT (SY)
S. BDWY & 3RD ST S	82	2,781.00	28.00	13.00	12.00

CONSTRUCT CONCRETE WALK, CURB AND GUTTER

LOCATION	*TYPE B624 C&G (LF)*	*CONC. MEDIAN (SY)*	*6" CONC. WALK (SF)*	*TRUNCATED DOMES*	*NOTES*
S. BDWY & 3RD ST S	28.00	1.50	2781.00	64.00	
TOTALS	28.00	1.50	2781.00	64.00	

STANDARD DETAIL PLATES

CITY OF ROCHESTER

NO.	DETAIL PLATE
2-01	Concrete Curb and Gutter
2-06	Curb and Gutter Reinforcement at Catch Basins
2-13	Pedestrian Curb Ramp

THE FOLLOWING STANDARD PLATES, APPROVED BY THE FEDERAL HIGHWAY ADMINISTRATION SHALL APPLY ON THIS PROJECT

STATE OF MINNESOTA

NO.	DETAIL PLATE
8114A	P.V.C. HANDHOLE / PULLBOX
8115D	PEDESTRIAN PUSH BUTTON INSTALLATION
8118D	SERVICE EQUIPMENT & POLE TRAFFIC CONTROL SIGNALS
8119C	GROUND MOUNTED CABINET FOUNDATION
8120P	POLE FOUNDATION (PA85)
8121G	TRANSFORMER BASE AND POLE BASE PLATE
8123G	POLE AND MAST ARM
8124E	MAST ARM SIGNAL HEAD MOUNTS
8126K	POLE FOUNDATION (PA90 AND PA100)

CONTROL & TRAVERSE POINTS

NODE ID	LOCATION	DESCRIPTION	NORTHING	EASTING
1	85+22.23 - 49.89 RT	BLK_COR	167968.519	619384.945
2	89+34.64 - 43.13 RT	TRAV_STA	168380.899	619376.369
4	91+25.79 - 49.85 LT	PROP_COR	168571.641	619282.544

ALIGNMENT ON SOUTH BROADWAY

CONTROL POINT	STATION	NORTHING	EASTING	DIRECTION	DISTANCE
BOP	85+00.00	167946.0722	619335.1507	N 00°15'09" W	750.00
EOP	92+50.00	168696.0646	619331.8460		

Revision comment: –
Reinsert: –

I hereby certify that this plan was prepared by me or under my direct supervision and that I am a duly Licensed Professional Engineer under the laws of the State of Minnesota.
Date: 5-15-13 Lic. No. 24067

City of Rochester, Minnesota
Department Of Public Works
201 4th Street S.E.
Rochester, MN 55904
Phone: (507) 328-2450
FAX: (507) 328-3401

Title: ESTIMATED QUANTITIES, DETAILS, AND TABULATIONS FOR TRAFFIC SIGNAL AT SOUTH BRAODWAY AND 3RD STREET

Designer: CWF
Checker: RJK

S.A.P. No. ----
Project No. M13-10 J6021
Sheet 2 of 11 Sheets

SALVAGE SIGNS (X) TYPE C & D	
SIGN DESCRIPTION	QTY
CROSS WALK	8
STREET SIGN	4
NO PARKING	1
NO U TRUN	1
TRUCK PROHIBITED	1
TOTAL	16

BITUMINOUS REMOVAL
CONCRETE REMOVAL
CONCRETE MEDIAN NOSE REMOVAL
CONCRETE JOINT REPAIR

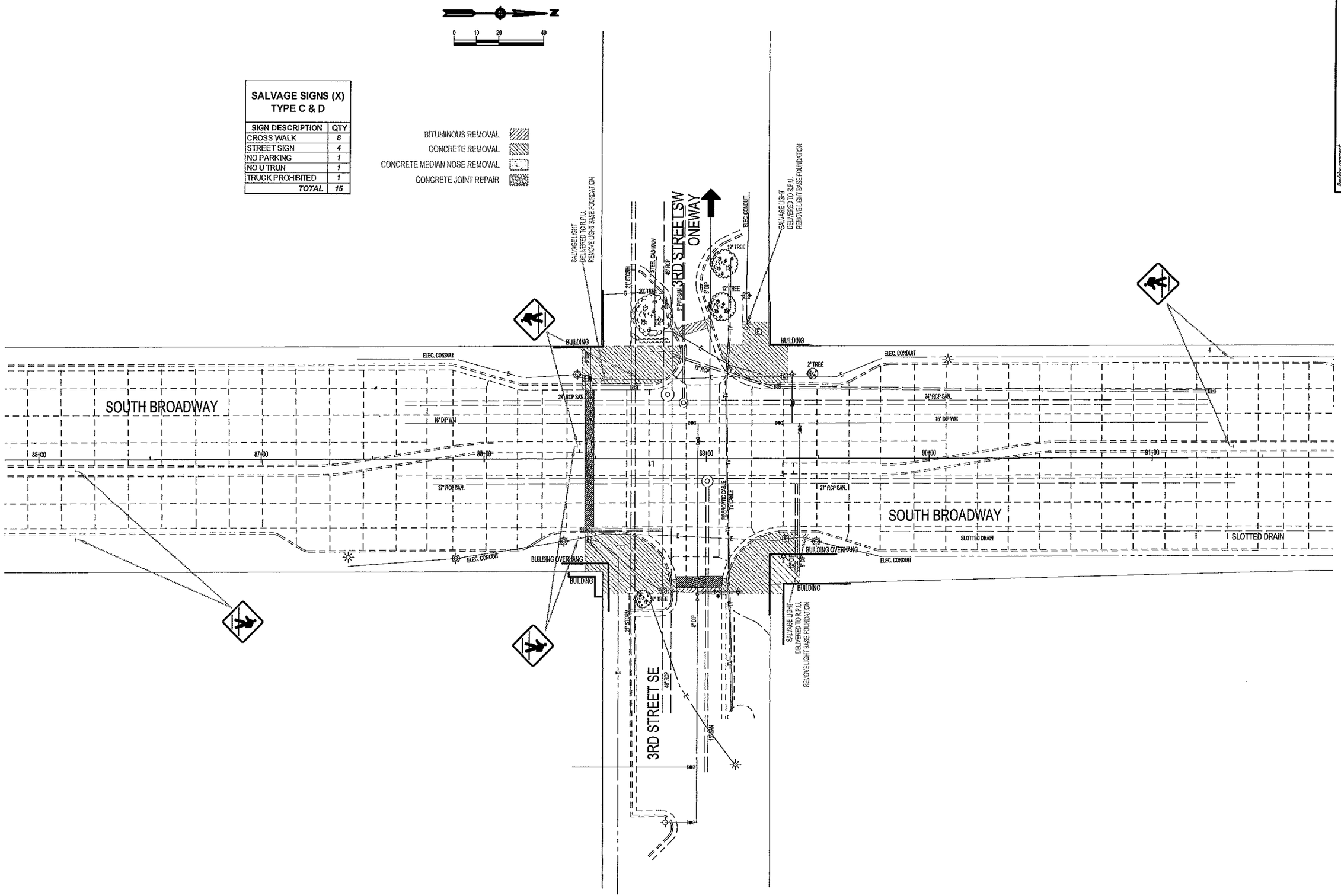

Revision comment: —
Reviewed: —

I hereby certify that this plan was prepared by me or under my direct supervision and that I am a duly Licensed Professional Engineer under the laws of the State of Minnesota.
Date: 5-15-13 Lic. No. 24667

City of Rochester, Minnesota
Department Of Public Works
201 4th Street S.E.
Rochester, MN 55904
Phone: (507) 328-2450
FAX: (507) 328-2401

Title: REMOVALS FOR TRAFFIC SIGNAL AT SOUTH BROADWAY AND 3RD STREET

Designer: CWF
Checker: RJK

S.A.P. No. —
Project No. M13-10 J6021
Sheet 3 of 11 Sheets

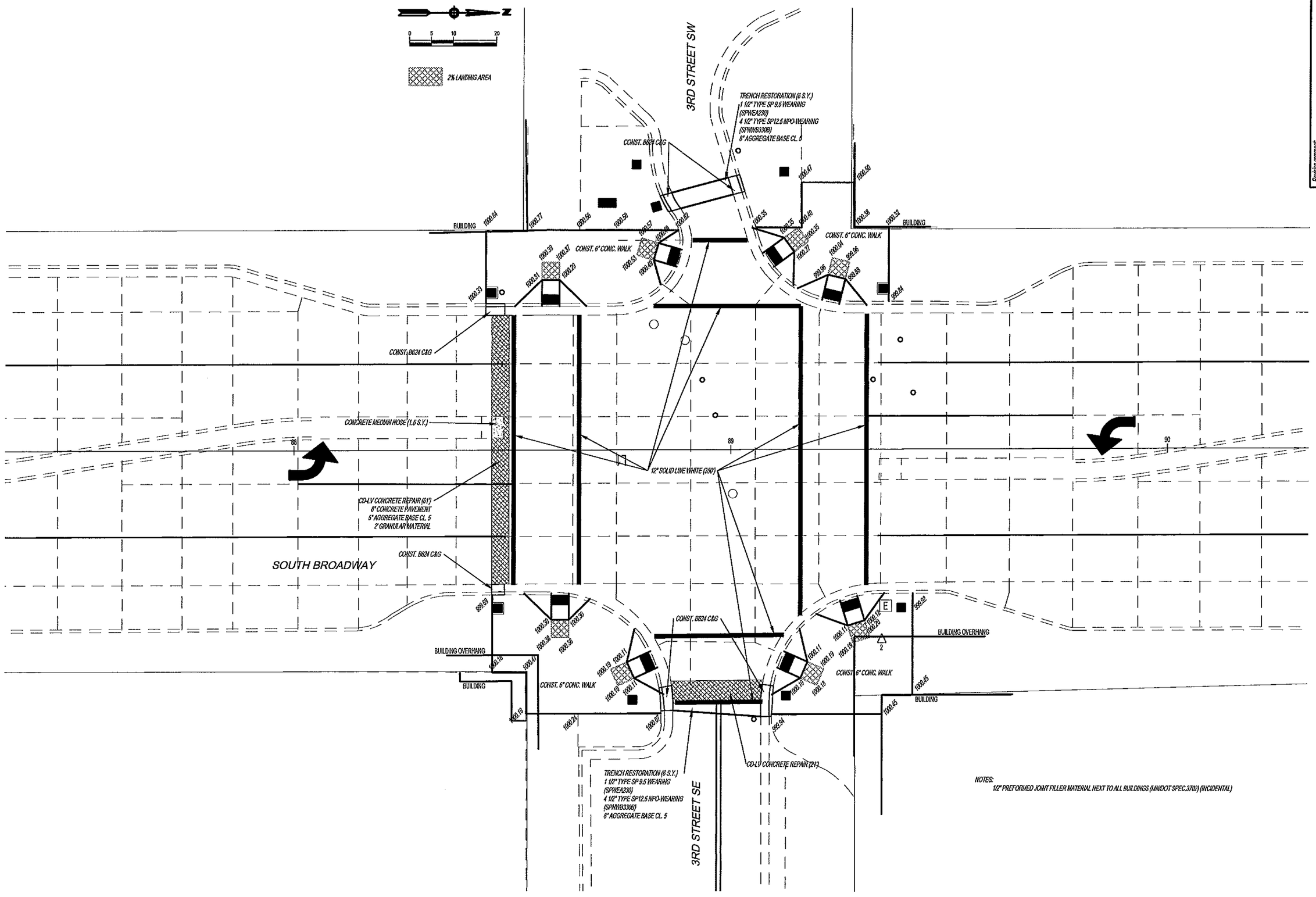

Revision comment: —
Revised: —

I hereby certify that this plan was prepared by me or under my direct supervision and that I am a duly Licensed Professional Engineer under the laws of the State of Minnesota.
Date: 6-15-13 Lic. No. 24087

City of Rochester, Minnesota
Department Of Public Works
201 4th Street S.E.
Rochester, MN 55904
Phone: (507) 328-2459
FAX: (507) 328-2401

Title: CONCRETE SIDEWALK, CURB & GUTTER, AND PAVEMENT FOR TRAFFIC SIGNAL AT SOUTH BROADWAY AND 3RD STREET

Designer: CWF
Checker: RJK

S.A.P. No. —
Project No. M13-10 J6021
Sheet 4 of 11 Sheets

(A) EQUIPMENT PAD - SEE DETAILS
INSTALL CONTROLLER AND CABINET
PAD MOUNTED LOAD CENTER

BETWEEN CONTROLLER CABINET
AND LOAD CENTER
2" NMC
2 - 1/C#6
1 - 1/C#6 GR

LOAD CENTER TO HH 8
2" NMC
2 - 3/C#14

(B) POWER PANEL (S.O.P.)
(INPLACE BY R.P.U.)
ABOVE DISCONNECT SWITCH 3 - 1C#2
EXTEND BELOW DISCONNECT SWITCH
INTO LOAD CENTER
2" NMC
3 - 1/C#2

(1) F&I PA90 FOUNDATION
TYPE PA90-35-D30-9 (DAVIT AT 270°)
LUMINAIRE LED
3-ONE WAY SIGNAL OVERHEAD 2',13',25' FORM END OF MAST ARM
2-ANGLE MOUNT SIGNAL AT 90° AND 180°
2-ANGLE MOUNTCD PED IND AT 90° AND 180°
ONE EVP DET AND INDICATOR LIGHT AND INSTALLED (Ø6)(19')
1-VIDEO DETECTION CAMERA & MOUNTING EQUIP. (Ø6)
1-SIGN 3 ST SOUTH (SEE DETAIL)
1-SIGN R10-X12, 42 X 48 (F&I)

EXTEND TO HH 8
3" NMC
2 - 12/C #14
2 - 4/C #14
2 - 3/C #14
1 - 3/C #16
1 - 3/C #20
1 - 5.5 PAIR VIDEO
1 - 1/C #6 INS GR

APS PED PB STA (PB8-1)
1 - APS PB
EXTEND INTO HH 8
1 1/2" NMC
1 - 2/C #14

APS PED PB STA (PB6-2)
1 - APS PB
EXTEND INTO HH 1
1 1/2" NMC
1 - 2/C #14

(2) F&I PA85 FOUNDATION
TYPE PA85-15-D30-9 (DAVIT AT 270°)
LUMINAIRE LED
1-ONE WAY SIGNAL OVERHEAD 3" FORM END OF MAST ARM
2-ANGLE MOUNT SIGNAL AT 90° AND 180°
2-ANGLE MOUNTCD PED IND AT 90° AND 180°
ONE EVP DET AND INDICATOR LIGHT AND INSTALLED (Ø8)(6')
1-VIDEO DETECTION CAMERA & MOUNTING EQUIP. (Ø8)
1-SIGN SOUTH BROADWAY (SEE DETAIL)

EXTEND TO HH 2
3" NMC
2 - 12/C #14
2 - 4/C #14
2 - 3/C #14
1 - 3/C #16
1 - 3/C #20
1 - 5.5 PAIR VIDEO
1 - 1/C #6 INS GR

APS PED PB STA (PB6-1)
1 - APS PB
EXTEND INTO HH 2
1 1/2" NMC
1 - 2/C #14

APS PED PB STA (PB8-4)
1 - APS PB
EXTEND INTO HH 3
1 1/2" NMC
1 - 2/C #14

SIGNAL INDICATIONS (12" LED HEADS)

FACE	R	Y	FYA	G
2-1	●	●		●
2-2	●	●		●
2-3	●	●		●
5-1	←	←	←	←
5-2	←	←	←	←
6-1	●	●		●
6-2	●	●		●
6-3	●	●		●
1-1	←	←	←	←
1-2	←	←	←	←
8-1	●	●		●
8-2	●	●		●
8-3	●	●		●

- ALL SIGNAL INDICATIONS SHALL BE 12" LED
-ALL SIGNAL HEADS SHALL BE BLACK POLYCARBONITE WITH BACKGROUND SHIELDS
-FYA DENOTES FLASHING YELLOW ARROW

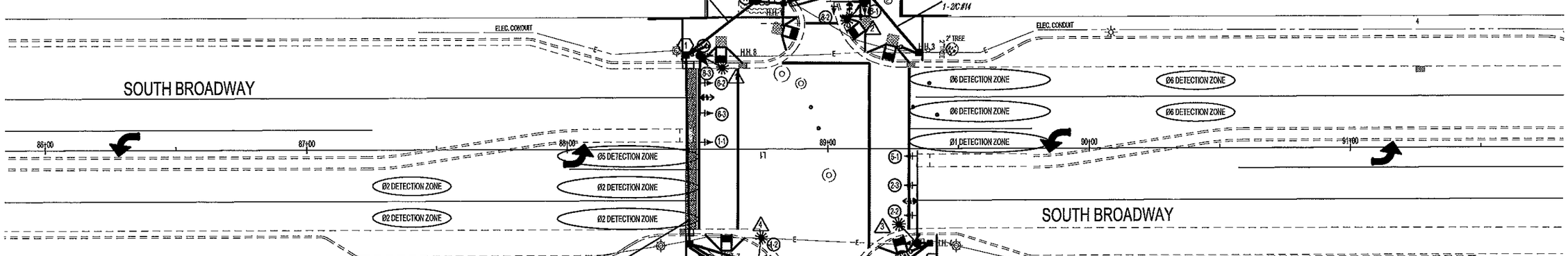

CONTROLLER PHASING, PEDESTRIAN INDICATIONS AND PUSH BUTTONS LAYOUT

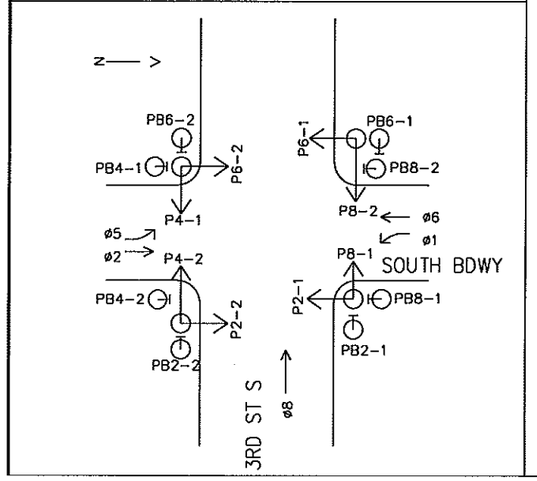

NOTES:

1. LOCATION OF POLES, VIDEO DETECTION ZONES, EQUIPMENT PAD AND HANDHOLES SHALL BE DETERMINED IN THE FIELD BY THE ENGINEER.
2. EACH SIGNAL FACE SHALL HAVE BACKGROUND SHIELD.
3. EACH PEDESTRIAN INDICATION SHALL BE ONE SECTION HAND/WALKING PERSON INDICATION, WITH COUNT DOWN TIMER THE HAND INDICATION BEING AN LED INDICATION. SEE SPECIAL PROVISIONS. THE CITY SHALL PROVIDE PEDESTRIAN PUSHBUTTON SIGNS.
4. ALL HANDHOLES SHALL BE PVC HANDHOLES WITH METAL FRAMES AND COVERS (PER Mn/DOT STANDARD PLATE NO. 8114A).
5. SEE SPECIAL PROVISIONS REGARDING SIGN PANELS TO BE FURNISHED AND INSTALLED BY CONTRACTOR.
6. SEE SPECIAL PROVISIONS FOR INFORMATION REGARDING AND CITY FURNISHED MATERIALS.
7. A 7/8" HALF COUPLING, 7/8" PIPE NIPPLE AND CONDUIT OUTLET BODY SHALL BE FURNISHED AND INSTALLED APPROX. 71" FROM LEFT END OF ALL MAST ARMS.
8. ALL VEHICLE SIGNAL INDICATIONS SHALL BE LED. SEE SPECIAL PROVISIONS.
9. EVP EQUIPMENT, VIDEO DETECTION EQUIPMENT AND BRACKETING, CABINET AND CONTROLLER WILL BE PROVIDED BY THE CITY.
10. ALL NEW CONDUIT SHALL BE NMC - SCHEDULE 80 OR HDPE SCHEDULE 80 AND CARRY 1-1/C #6 INSULATED GROUNDING CONDUCTOR AS SHOWN IN PLAN.
11. DOUBLE HUBS AT 90°, 180°, AND 240°
12. SEE DIVISION SS FOR BRACKETING REQUIREMENTS
13. THE CONTRACTOR SHALL INSTALL ELECTRICAL EQUIPMENT AND SIGNAL CABINET - FURNISHED BY THE CITY - AND SHALL MAKE ALL FIELD CONNECTIONS TO MAKE THE SIGNAL SYSTEM OPERATIONAL.
14. THE CONTRACTOR SHALL LOCATE AND VERIFY INPLACE UTILITIES PRIOR TO COMMENCING WORK.
15. FOR SIGN TYPE "D" SEE MAST ARM SIGNING DETAILS.
16. FOR PAVEMENT MARKING SEE CONSTRUCTION LAYOUT.
17. EVP DETECTION & CONFIRMATORY LIGHTS SHALL BE MOUNTED 6' FROM END OF THE MAST ARM . A1-3/C #20 CABLE SHALL BE WIRED DIRECT TO THE EVP DETECTOR - CONTINUOUS WITHOUT SPLICES FROM THE CABINET. 2 - 1/C #14 SHALL BE WIRED FROM THE CONFIRMATORY LIGHT TO THE TERMINAL BLOCK IN IN EACH POLE BASE.
18. THE CONTRACTOR IS RESPONSIBLE FOR CONTACTING THE POWER COMPANY TO ARRANGE FOR THE POWER CONNECTION.
19. ROEMOVE LIGHT POLE AND DELIVER THEM TO R.P.U.

Revision comments: —
Revised: —

I hereby certify that this plan was prepared by me or under my direct supervision and that I am a duly Licensed Professional Engineer under the laws of the State of Minnesota.
Date: 5-15-13 Lic. No. 24567

City of Rochester, Minnesota
Department Of Public Works
201 4th Street S.E.
Rochester, MN 55904
Phone: (507) 328-2450
FAX: (507) 328-2401

Title: SIGNAL LAYOUT AT SOUTH BROADWAY AND 3RD STREET

Designer: CWF
Checker: RJK

S.A.P. No. —
Project No. M13-10 J6021
Sheet 5 of 11 Sheets

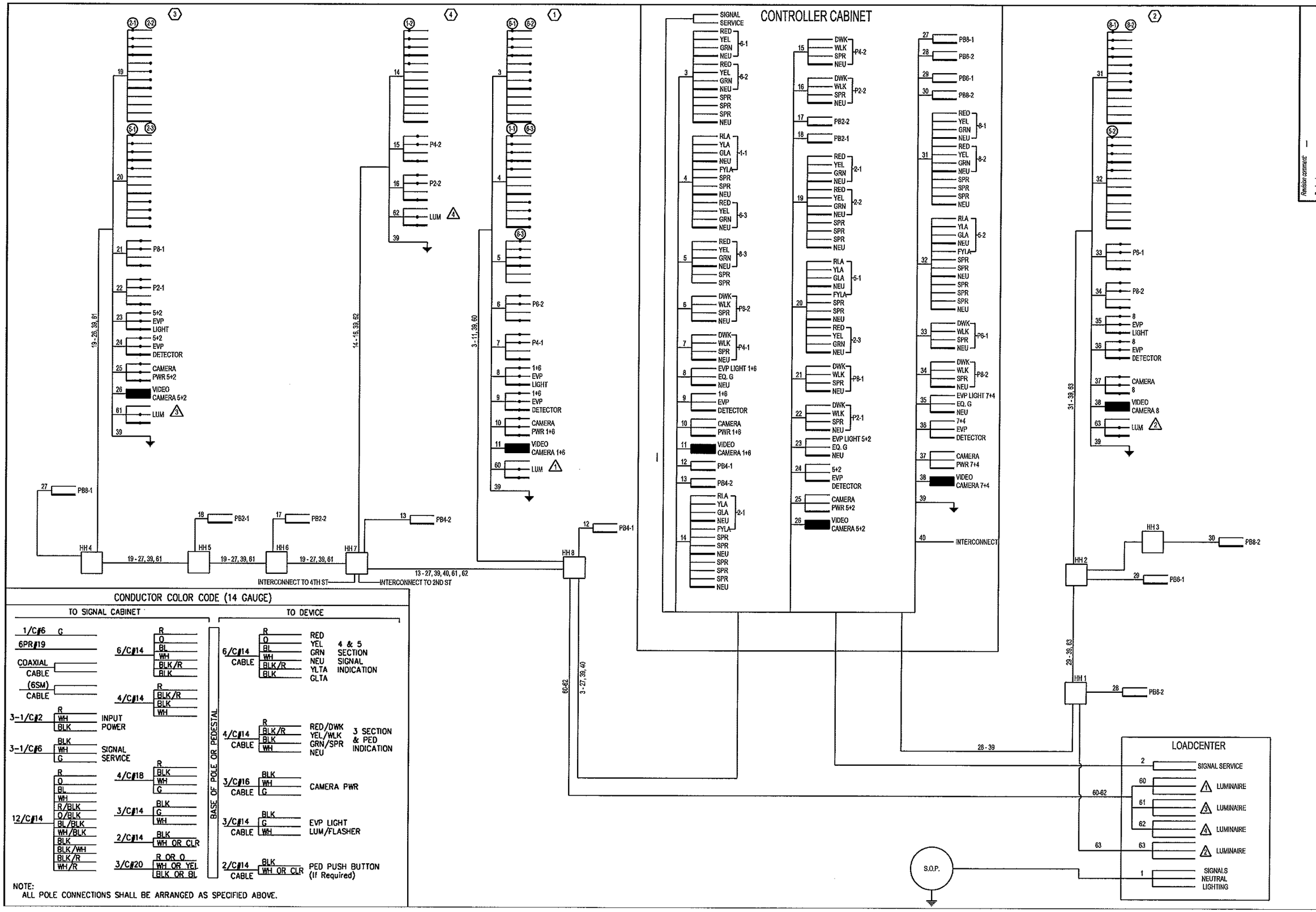

Revision comment: —
Revised: —

I hereby certify that this plan was prepared by me or under my direct supervision and that I am a duly Licensed Professional Engineer under the laws of the State of Minnesota.
Date: 5-15-13 Lic. No. 24957

City of Rochester, Minnesota
Department Of Public Works
201 4th Street S.E.
Rochester, MN 55904
Phone: (507) 328-2400
FAX: (507) 328-2401

Title: SIGNAL WIRING DIAGRAM AT SOUTH BROADWAY AND 3RD STREET

Designer: CWF
Checker: RJK

S.A.P. No. —
Project No. M13-10
J 6021
Sheet 6 of 11 Sheets

NOT DRAWN TO SCALE

EQUIPMENT PAD LAYOUT DETAIL

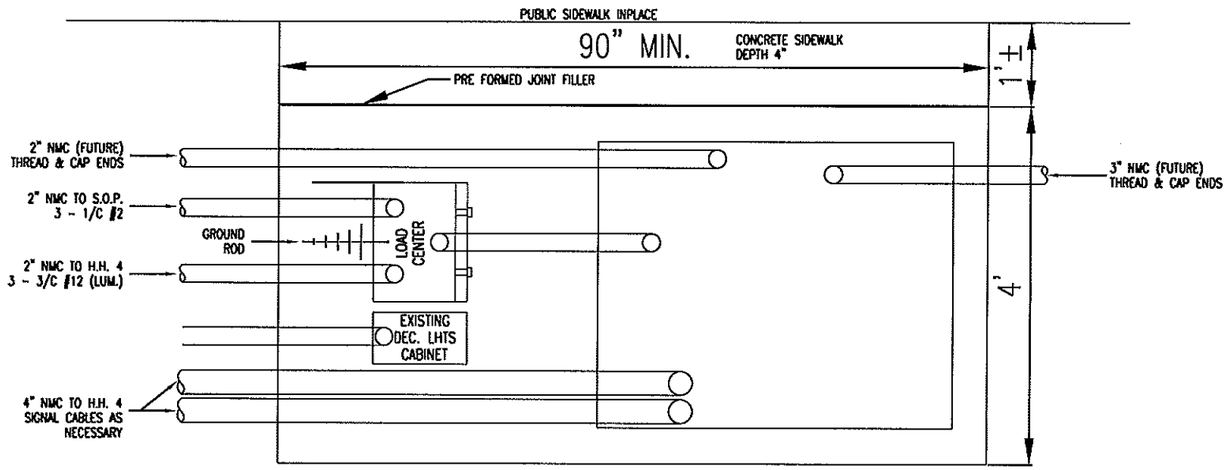

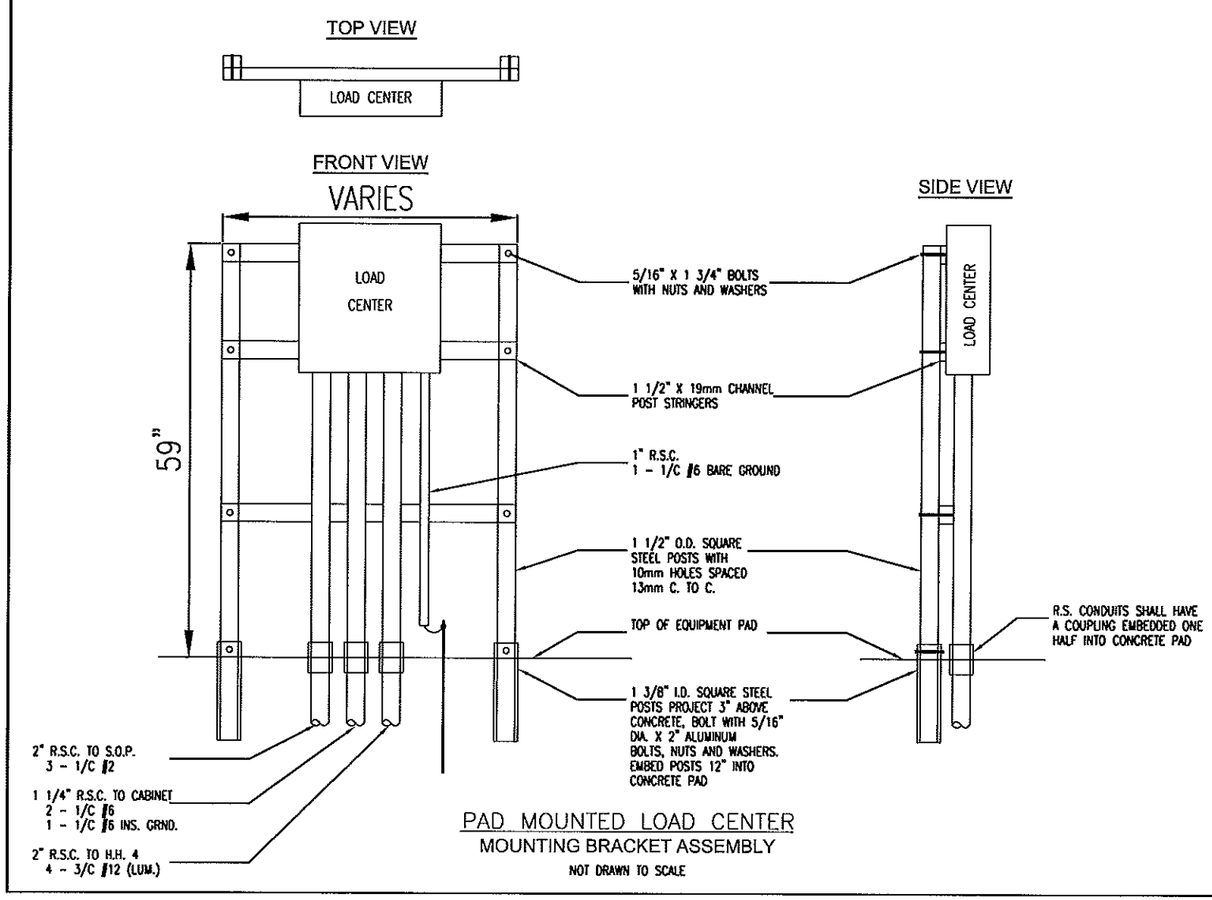

PAD MOUNTED LOAD CENTER
MOUNTING BRACKET ASSEMBLY
NOT DRAWN TO SCALE

GROUND ROD WIRING DETAIL FOR PAD WITH RACK MOUNTED SERVICE EQUIPMENT

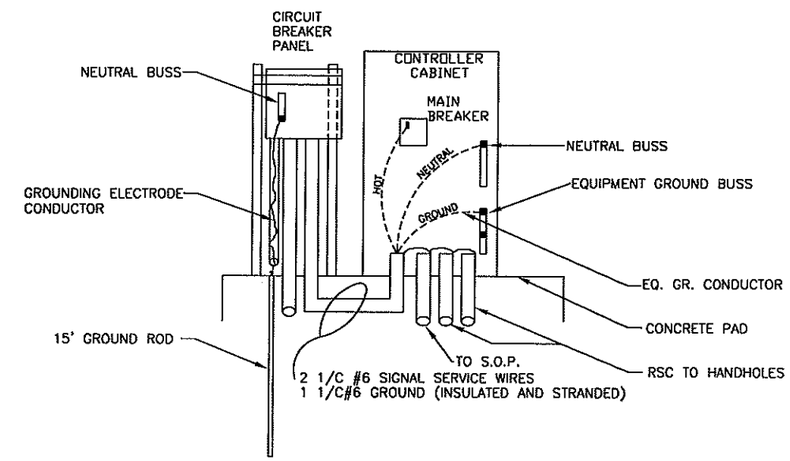

NOTES:

WHEN RACK MOUNTED SERVICE EQUIPMENT AND CONTROLLER CABINET ARE BOTH ON THE SAME PAD, THE GROUNDING ELECTRODE (15' GROUND ROD) SHALL BE LOCATED RIGHT UNDER THE SERVICE EQUIPMENT RACK.

A GROUNDING ELECTRODE CONDUCTOR (#6 BARE) SHALL RUN FROM THE NEUTRAL BUSS IN THE CIRCUIT BREAKER PANEL THROUGH A 1" CONDUIT TO THE GROUND ROD. THE CONDUIT SHALL TERMINATE APPROXIMATELY 2" ABOVE THE GROUND ROD.

2-1/C #6 SIGNAL SERVICE WIRES AND 1-1/C #6 INSULATED AND STRANDED GROUND WIRE SHALL RUN FROM THE ENCLOSED CIRCUIT BREAKER TO THE CONTROLLER CABINET THROUGH A SEPARATE RSC.

THE EQUIPMENT GROUNDING CONDUCTOR SHALL BE CONNECTED TO THE EQUIPMENT GROUND BUSS IN THE CONTROLLER CABINET. THE NEUTRAL WIRE OF THE SIGNAL SERVICE WIRES SHALL GO TO THE NEUTRAL BUSS OF THE CONTROLLER CABINET.

A #6 BARE EQUIPMENT GROUNDING CONDUCTOR SHALL BE CONNECTED FROM THE EQUIPMENT GROUND BUSS TO EACH CONDUIT GROUND BUSHING LUG IN THE CONTROLLER CABINET.

MOVE EXISTING DECORATIVE LIGHT CABINET FROM OLD CONCRETE PAD TO NEW PAD WITH THE TRAFFIC CONTROLLER CABINET.

EXISTING DECORATIVE LIGHT CABINET KEEP WORKING TEMPORARILY WHILE CONSTRUCTING THE NEW PAD

Revision comment: ----
Revised: ----
Creation Date:

I hereby certify that this plan was prepared by me or under my direct supervision and that I am a duly Licensed Professional Engineer under the laws of the State of Minnesota.
Date: 5-15-13 Lic. No. 24697

City of Rochester, Minnesota
Department Of Public Works
201 4th Street S.E.
Rochester, MN 55904
Phone: (507) 287-7800
FAX: (507) 281-6216

Title: DETAILS FOR TRAFFIC SIGNAL AT SOUTH BROADWAY AND 3RD AVENUE SOUTH

Designer: CWF
Checker: RJK

J6021

S.A.P. No. ----
Project No. M13-10
Sheet 7 of 11 Sheets

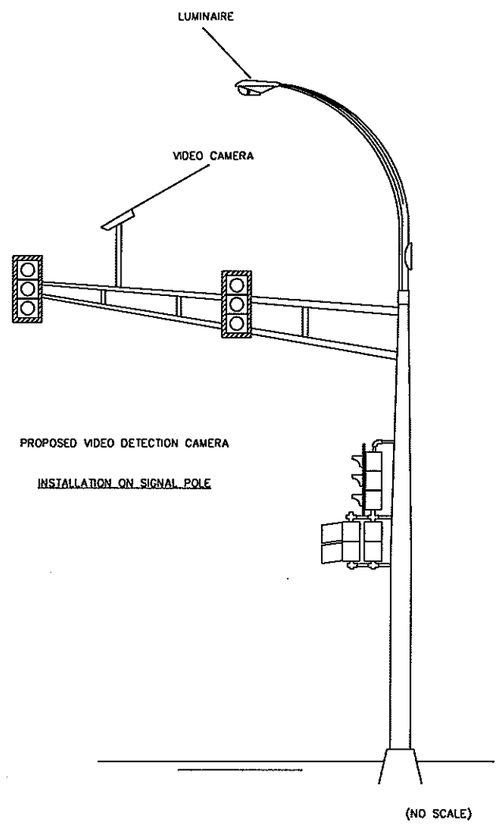

VIDEO DETECTION DETAILS

NOTES:

1. ALL CAMERA DETECTION DEVICES AND EQUIPTMENT SHALL BE FURNISHED BY THE CITY AND INSTALLED BY THE CONTRACTOR.
2. THE CONTRACTOR SHALL RUN ONE CONTINUOUS PULL (WITHOUT SPLICES) OF VIDEO CABLE BETWEEN THE CAMERA AND THE TRAFFIC SIGNAL CONTROLLER CABINET FOR EACH CAMERA.
3. CABLES FOR CAMERA OPERATION SHALL MEET THE FOLLOWING SPECIFICATION: "Belden 8281"
4. CAMERA'S SHALL BE MOUNTED ON MAST ARMS WITH ASTRO BRACKET AND EXTENSION

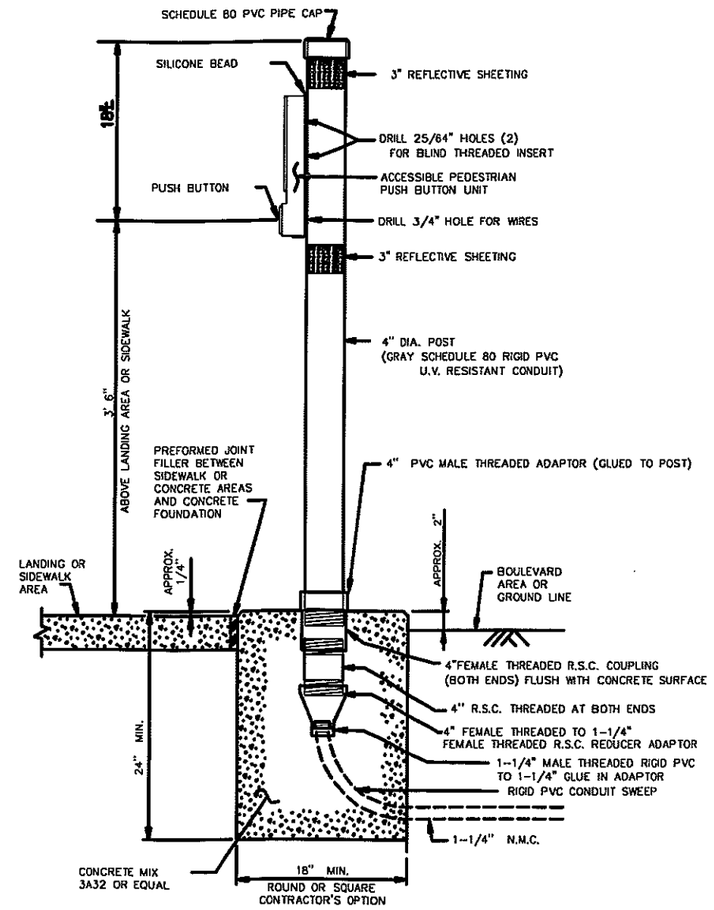

PEDESTRIAN PUSH BUTTON STATION

NOTES:

1. PLACEMENT AND ORIENTATION OF THE PUSH BUTTON STATION IS CRITICAL. THE BUTTON ARROW DIRECTION MUST POINT TO THE DIRECTION OF THE APPROPRIATE CROSSING. SCREW IN POST TO A TIGHTENED POSITION BEFORE MOUNTING ACCESSIBLE PEDESTRIAN PUSH BUTTON UNIT TO THE POST.
2. BLIND THREADED INSERTS (RIVET NUT) MUST BE INSTALLED USING MANUFACTURERS SPECIFIC INSTALLATION TOOL. NO OTHER METHOD OF INSTALLATION IS ACCEPTABLE.
3. BLIND THREADED INSERTS SHALL BE ZINC PLATED STEEL WITH 1/4 - 20 UNC THREADS. INSERT SHALL BE SUITABLE FOR USE ON A MOUNTING SURFACE WALL THICKNESS OF .337". APPROVED BLIND THREADED INSERTS CAN BE FOUND ON THE MN/DOT QUALIFIED PRODUCTS LIST.
4. MOUNTING BOLTS SHALL BE 1/4 - 20 STAINLESS STEEL. APPLY BRUSH ON ANTI SEIZE COMPOUND TO BOLTS PRIOR TO ASSEMBLY.
5. APPLY A BEAD OF 100% SILICONE SEALANT ALONG THE TOP OF THE PUSH BUTTON UNIT WHERE IT COMES IN CONTACT WITH THE 4" POST.
6. THE REFLECTIVE SHEETING SHALL BE WHITE AT INTERSECTION CORNERS AND SHALL BE YELLOW WHEN USED IN CENTER MEDIANS. SEE MN/DOT SIGNING QUALIFIED PRODUCTS LIST (QPL) FOR APPROVED SIGN SHEETING.

Revision: — Revision comment: —
Creation Date:

I hereby certify that this plan was prepared by me or under my direct supervision and that I am a duly Licensed Professional Engineer under the laws of the State of Minnesota.
Russell A. Klein Date 5-15-13 Lic. No. 24697

City of Rochester, Minnesota
201 4th Street S.E.
Rochester, MN 55904
Phone: (507) 287-7800
FAX: (507) 281-6216
Department Of Public Works

Title: DETAILS FOR TRAFFIC SIGNAL AT SOUTH BROADWAY AND 3RD AVENUE SOUTH

Designer: CWF
Checker: RJK

J 6021

S.A.P. No. —
Project No. M13-10
Sheet 8 of 11 Sheets

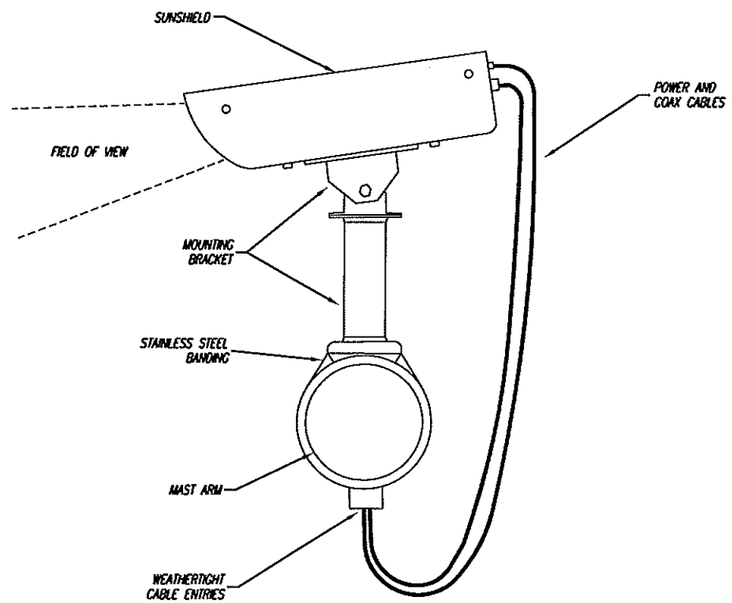

INSTALLED CAMERA

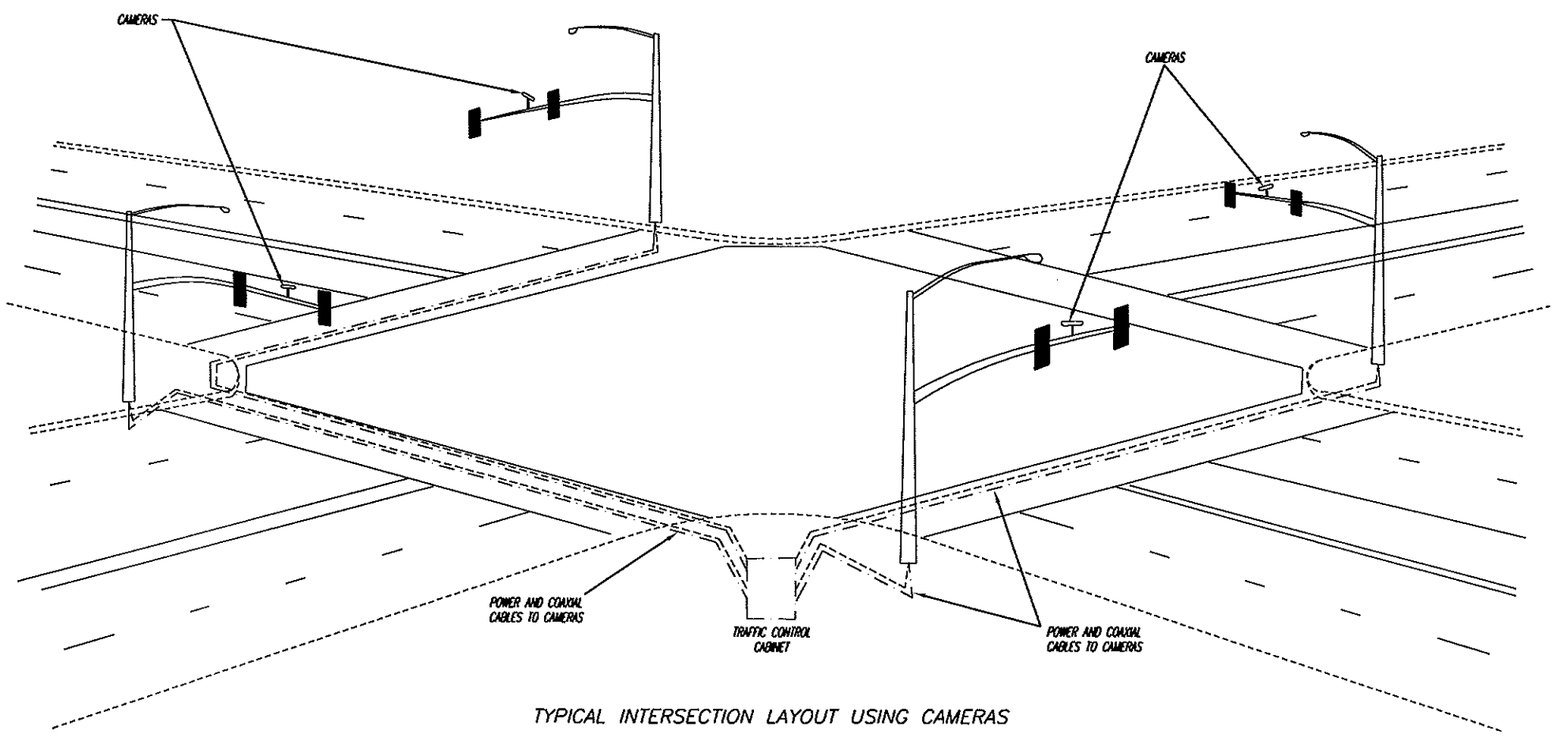

TYPICAL INTERSECTION LAYOUT USING CAMERAS

NOTES:

ALL CAMERA DETECTION DEVICES WILL BE FURNISHED BY THE CITY OF ROCHESTER TRAFFIC DEPARTMENT. THE CONTRACTOR IS REQUIRED TO PROVIDE WIRE AND INSTALL CAMERAS ON MAST ARM PER FIELD ENGINEERS LOCATIONS AND PER DIAGRAM

RUN ONE CONTINUOUS PULL (WITHOUT SPLICES) OF COAXIAL MN 2565.611 CABLE AND POWER CABLE BETWEEN THE CAMERA MOUNTING LOCATION AND THE TRAFFIC CONTROL CABINET. THE CABLES NEED TO MEET TH FOLLOWING SPECIFICATION:

*BELDEN 8281 COAXIAL CABLE
*POWER FOR THE CAMERA WILL BE FROM THE CABINET TO CAMERA 3 CONDUCTOR 16 GAUGE OUTDOOR RATED

Revision comment: ----
Revised: ----
Creation Date:

I hereby certify that this plan was prepared by me or under my direct supervision and that I am a duly Licensed Professional Engineer under the laws of the State of Minnesota.
Date: 5-15-11 Lic. No. 24667

City of Rochester, Minnesota
Department Of Public Works
201 4th Street S.E.
Rochester, MN 55904
Phone: (507) 287-7800
FAX: (507) 281-6216

Title: DETAILS FOR TRAFFIC SIGNAL AT SOUTH BROADWAY AND 3RD AVENUE SOUTH

Designer: CWF
Checker: RJK

S.A.P. No. ----
Project No. M13-10
J6021
Sheet 9 of 11 Sheets

SIGNS – F & I							
SIGN PANEL	SIGN TYPE	a (FT)	b (FT)	SIZE (in.)	NO. REQ.	SQ. FT. PER SIGN	POLE NO.
S Broadway	D		5	84 x 18	1	10.5	2
3rd St S	D		26	66 x 18	2	8.3	1&3
LEFT TURN YIELD ON FLASHING YELLOW ARROW	R10–X12	4		42 x 48	2	14.0	1&3

SPECIFIC NOTE:
(1) SPACING BETWEEN STIFFENERS SHALL NOT EXCEED 36 INCHES AND SHALL BE UNIFORMLY SPACED. SEE STANDARD SIGNS MANUAL, PAGE 105A (REVISION DATE 7/06/07) FOR BRACKET SPACING REQUIREMENTS.

GENERAL NOTES:
1. CORNERS OF STANDARD SIGN PANELS WITH MARGINS SHALL BE TRIMMED.
2. TYPE D SIGN PANELS EXTENDING BEYOND THE BORDER SHALL NOT BE TRIMMED.
3. FOR STRUCTURAL DETAILS 0F MAST ARM MOUNTED SIGNS SEE STANDARD SIGNS MANUAL, PAGE 105A.
4. FOR TYPE "D" STRINGER AND PANEL JOINT DETAILS SEE STANDARD SIGNS MANUAL, PAGE 105.
5. THE MAST ARM MOUNTED SIGNS ARE INCIDENTAL TO THE SIGNAL SYSTEM PAY ITEM.

MAST ARM SIGN LOCATION

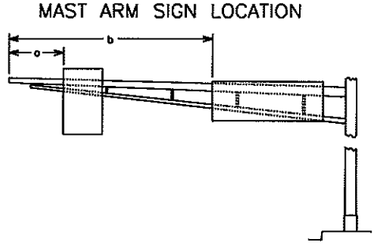

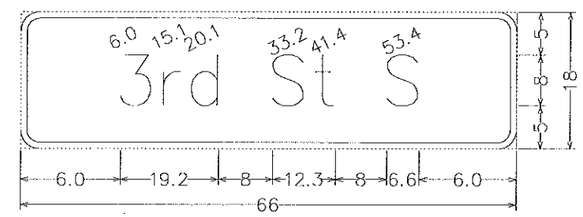

3.0" Radius, 1.0" Border, White on Green;
[16th St S] E Mod;

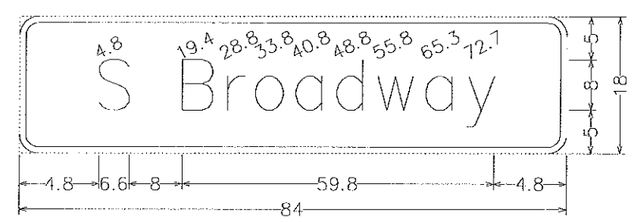

3.0" Radius, 1.0" Border, White on Green;
[S Broadway] E Mod;

Revision: —
Creation Date: —
Revision comment:

I hereby certify that this plan was prepared by me or under my direct supervision and that I am a duly Licensed Professional Engineer under the laws of the State of Minnesota.
Date: 5-15-13 Lic. No. 24697

City of Rochester, Minnesota
Department Of Public Works
201 4th Street S.E.
Rochester, MN 55904
Phone: (507) 287-7800
FAX: (507) 281-6216

Title: SIGNING DETAILS FOR TRAFFIC SIGNAL AT SOUTH BROADWAY AND 3RD AVENUE SOUTH

Designer: CWF
Checker: RJK

S.A.P. No. —
Project No. M13-10
J 6021
Sheet 10 of 11 Sheets

P:\PROJECTS\J PROJ\J6021 TH 63 3rd St SW\Signal\Design\Dwgs\6021M14.dwg, DETAIL S, 5/22/2013 11:18:42 AM, 1:2

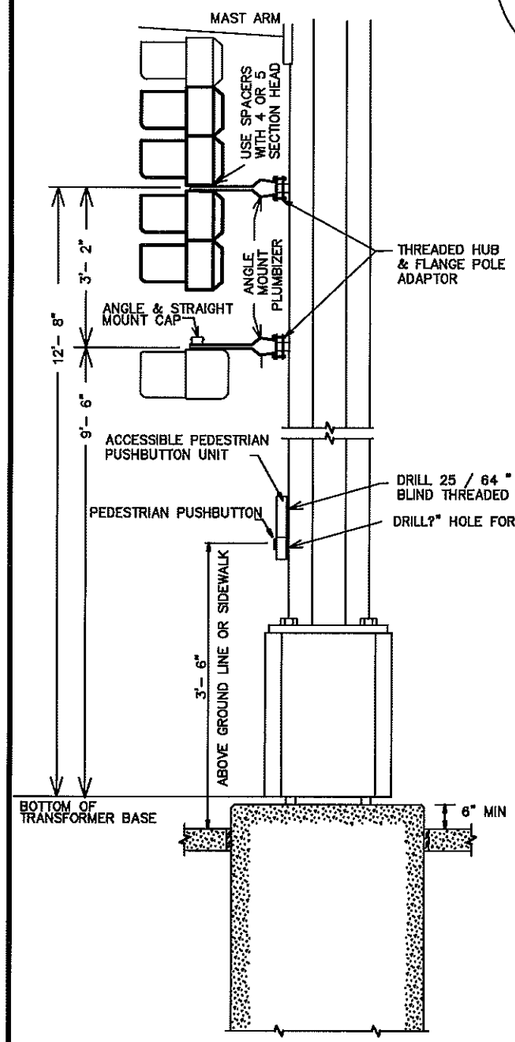

TYPICAL SIGNAL POLE MOUNTING

NOT TO SCALE

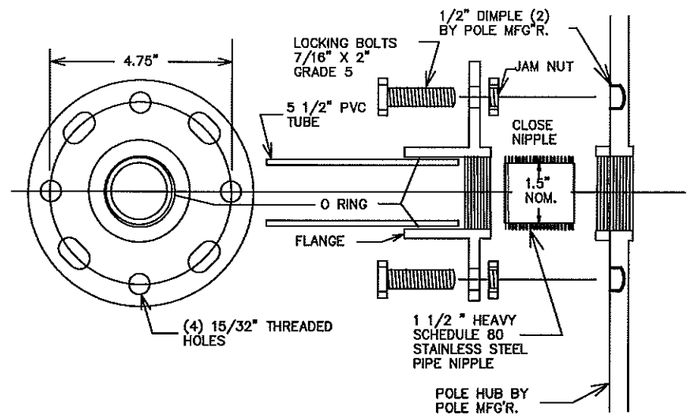

THREADED HUB AND FLANGE POLE ADAPTOR

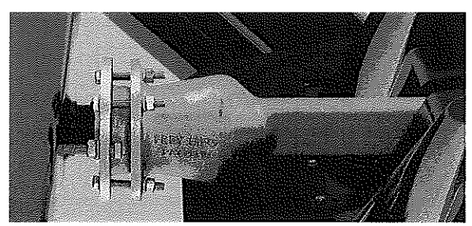

NOTE:

1. ALL THREADED SURFACES TO BE COATED WITH ANTI-SEIZE COMPOUND.
2. USE SIGNAL HEAD MOUNTED SPACERS FOR 4 & 5 SECTION POLY HEADS.
3. SEE STANDARD PLATE NUMBER 8123 FOR ADDITIONAL SIGNAL POLE DETAILS.
4. SEE SPECIAL PROVISIONS FOR PAINTING REQUIREMENTS.

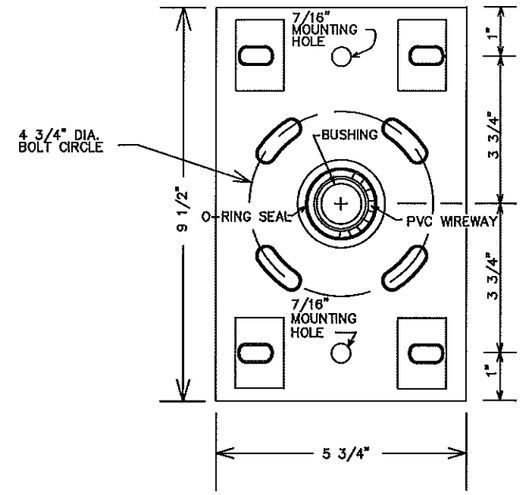

BOLT ON HUB & FLANGE

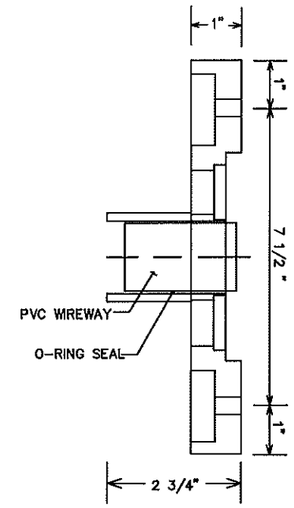

SIDE VIEW

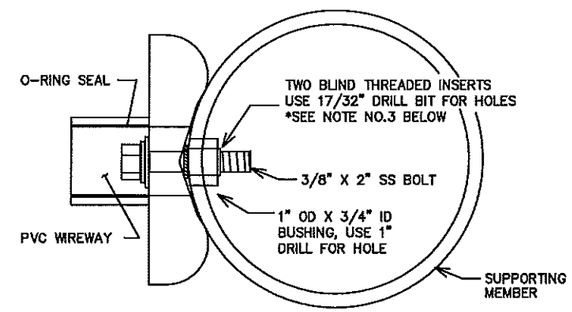

TOP VIEW

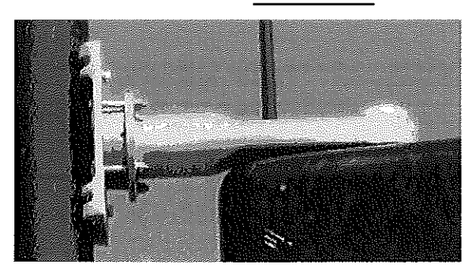

NOTE:

1. ALL THREADED SURFACES TO BE COATED WITH ANTI-SEIZE COMPOUND.
2. USE SIGNAL HEAD MOUNTED SPACERS FOR 4 & 5 SECTION POLY HEADS.
3. BLIND THREADED INSERTS MUST BE INSTALLED USING MANUFACTURERS SPECIFIC INSTALLATION TOOL. NO OTHER METHOD OF INSTALLATION IS ACCEPTABLE.
4. SEE STANDARD PLATE NUMBER 8122 FOR ADDITIONAL PEDESTAL POLE DETAILS.
5. SEE SPECIAL PROVISIONS FOR PAINTING REQUIREMENTS.

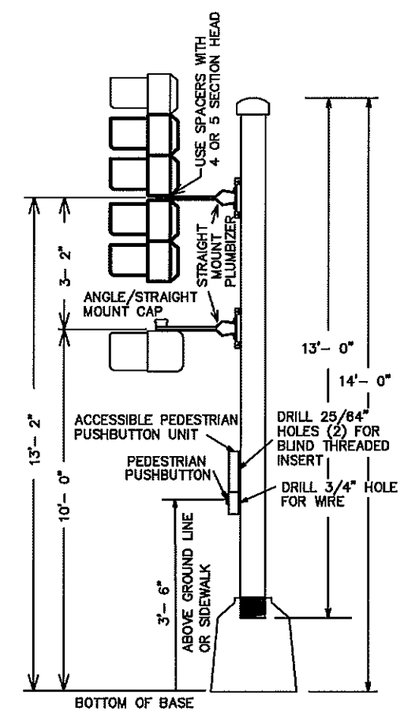

TYPICAL PEDESTAL MOUNTING

NOT TO SCALE

Revision comments: —

Revised: —

I hereby certify that this plan was prepared by me or under my direct supervision and that I am a duly Licensed Professional Engineer under the laws of the State of Minnesota.

Date: 5-15-13 Reg. No. 24667

City of Rochester, Minnesota
Department Of Public Works
201 4th Street S.E.
Rochester, MN 55904
Phone: (507) 285-8100
FAX: (507) 328-6401

Title: POLE MOUNTING DETAILS

Designer: CWF

Checker: RJK

Project No. M13-10 J6021

Sheet 11 of 11 Sheets